ARMY TM 5-803-11
AIR FORCE AFJMAN 32-10139

TECHNICAL MANUAL

CHILDREN'S OUTDOOR PLAY AREAS

APPROVED FOR PUBLIC RELEASE; DISTRIBUTION IS UNLIMITED

HEADQUARTERS, DEPARTMENT OF THE ARMY AND THE AIR FORCE
30 May 1997

REPRODUCTION AUTHORIZATION/RESTRICTIONS

This manual has been prepared by or for the Government and, except to the extent indicated below, is public property and not subject to copyright.

Copyrighted material included in the manual has been used with the knowledge and permission of the proprietors and is acknowledged as such at point of use. Anyone wishing to make further use of any copyrighted material, by itself and apart from this text, should seek necessary permission directly from the proprietors.

Reprints or republication of this manual should include a credit substantially as follows:

"Joint Departments of the Army and Air Force, TM 5-803-11/AFJMAN 32-10139, Children's Outdoor Play Areas," _____."

TECHNICAL MANUAL No. 5-803–11

AIR FORCE MANUAL No. 32–10139 }

HEADQUARTERS
DEPARTMENTS OF THE ARMY
AND THE AIR FORCE
WASHINGTON, D.C. *30 May 1997*

CHILDREN'S OUTDOOR PLAY AREAS

	Paragraph	Page
CHAPTER 1. INTRODUCTION		
purpose	1–1	1-1
Scope	1–2	1–1
References	1–3	1–1
Definitions	1–4	1–1
Supervised Play Areas,	1–5	1–1
Play Area Planning and Design Process	1–6	1–1
The Play Area Committee	1–7	1–1
CHAPTER 2. SITE SELECTION		
Introduction	2–1	2-1
Types of Unsupervised Play Areas	2-2	2–1
Site Selection Guidance....,,..	2–3	2–2
Existing Play Equipment Areas...	2–4	2–4
CHAPTER 3. SITE ANALYSIS AND USER NEEDS ANALYSIS		
Introduction,	3–1	3– 1
Coordinate with the Play Area Committee	3–2	3–1
Collect Relevant Documents ...	3-3	3–1
Conduct a User Needs Analysis.	3–4	3-1
Conduct a Site Inventory and Analysis	3-5	3–2
CHAPTER 4. THE DESIGN CRITERIA		
Introduction	4-1	4–1
Confirm the Age Group Served	6-2	4–1
Identify Play Area Goals	4-3	4– 1
Play Area Components and Manufactured Play Equipment	4-4	4–1
Selection Criteria for Play Area Components.	4-5	4– 1
Select Play Area Components	4-6	4–3
Determines Space Requirements.	4-7	4–3
Reevaluate the Site .,	4–8	4–3
Coordinate with the Play Area Committee	4-9	4–3
CRAPTER 5. PLAY AREA RELATIONSHIPS		
Introduction	5–1	5–1
Play Area Component Relationships	5–2	5–1
Identify Needed Separation and Barriers	5-3	5–2
Play Lot (6 Weeks to 9 Years)	5–4	5–2
Neighborhood Park (9 to 15 Years)	5-5	5–4
Community Park (O to 15 Years)..	5-6	5–5
CHAPTER 6. THE DESIGN DOCUMENTS		
Introduction	6-1	6-1
Site Adapt the Adjacency Diagram	6-2	6 -1
Create a Conceptual Design and Cost Estimate	6-3	6 -1
Coordinate with the Play Area Committee	6-4	6-3
Develop the Final Design Documents.	6-5	6-3
Create a Phased Development Plan	6-6	6-3
Coordinate with the Play Area Committee	6-7	6-3
CHAPTER 7, CHILD SAFETY REQUIREMENTS FOR OUTDOOR PLAY AREAS		
Introduction	7-1	7–1
Guidelines for Child Safety	7–2	7–1
Material Selection	7–3	7– 1
Head and Neck Entrapment	7–4	7–2

APPROVED FOR PUBLIC RELEASE; DISTRIBUTION IS UNLIMITED

*This Manual supersedes TM 5–803-11/AFJMAN 32–10139 dated April 1988.

	Paragraph	Page
Maximum Recommended Equipment Heights by Age Group	7–5	7–2
Multiple Exits	7–6	7-2
Pinch, Crush, and Shear Points	7-7	7–2
Protective Barriers	7-8	7–4
Protrusions	7–9	7-5
Sharp Points and Edges	7-10	7–5
Use Zones	7-11	7–5
Utilities	7-12	7–6
CHAPTER 8. ACCESSIBILITY		
Introduction	8-1	8-1
Accessibility Criteria	8–2	8-1
Disability Types	8-3	8-1
Play Area Components	8–4	8-2
Noncompliance	8-5	8-4
CHAPTER 9. PLAY AREA COMPONENTS		
Introduction	9-1	9-1
Maintenance Requirements	9-2	9-1
Entry Area	9-3	9-1
Pathways	9–4	9-1
Sports and Games	9–5	9-2
Dramatic Play	9-6	9-3
Sand Play	9-7	9-3
Gardens	9-8	9-4
Gathering Place	9-9	9-4
Manufactured Play Equipment	9-10	9-5
Plant Materials	9-11	9-5
Landforms	9–12	9-5
Separation and Barriers	9– 13	9-6
Signage	9– 14	9-6
Parking	9-15	9-7
CHAPTER 10. MANUFACTURED PLAY EQUIPMENT		
Introduction	10-1	10–1
Freestanding and Composite Structure Play Events	10–2	10–1
Safety Guidelines for Manufactured Play Equipment	10–3	10–1
Structural Integrity	10–4	10-1
Ladders, Stairway and Ramps (Not for Wheelchair Use)	10–5	10–1
Transition to Platform	10–6	10–2
Platforms and Play Surfaces	10-7	10–2
Stepped Platform	10-8	10–3
Ramp Intended for Wheelchair Access	10–9	10–3
Transfer Point	10– 10	10–3
Recommended Play Events	10–11	10–5
Balance Beam	10–12	10–5
Banister Slide	10– 13	10–6
Chinning and Turning Bar	10–14	10–6
Clatter Bridge	10-15	10–7
Climber	10–16	10–8
Climber—Arch	10–17	10–8
Climber—Net	10–18	10–9
Fire Pole	10–19	10–10
Game Panel	10-20	10–10
Horizontal Ladder	10–21	10–11
Parallel Bars	10–22	10–11
Playhouse	10–23	10–12
Ring Trek	10–24	10–12
Sand Table	10-25	10–12
Slide	10–26	10–13
Spring Rocking Equipment	10–27	10–14
Stationary Bridge	10-28	10–15
Swing—To-Fro (Single Axis) Swing	10-29	10–16
Swing—Rotating (Multiple Axis or Tire) Swing	10–30	10–17
Track Ride	10–3 1	10–19
Tunnel	10–32	10–19
Play Events Which are Not Appropriate	10–33	10-20

	Paragraph	Page
Composite Structure	10–34	10–20
Play Events Not Included in the Manual	10–35	10–21
CHAPTER 11. PLAY AREA SURFACING		
Introduction	11-1	11–1
Hard Surfaces	11–2	11–1
Safety Surfaces	11–3	11–2
Synthetic Surfacing	11–4	11–3
Organic Loose-Fill Surfacing	11-5	11-4
Inorganic Loose-Fill Surfacing	11–6	11–6
CHAPTER 12. PLANT MATERIALS		
Introduction	12–1	12–1
Uses of Plant Material	12–2	12–1
Plants in Play Activities	12–3	12–2
Selection Criteria	12–4	12–2
Accessibility	12–5	12–3
Child Safety	12-6	12–3
Plant List Development	12–7	12–4
CHAPTER 13. SELF-HELP		
Introduction	13–1	13-1
Play Equipment	13–2	13–1
Appropriate Volunteer Projects	13–3	13–1

APPENDIX A. REFERENCES
APPENDIX B. QUALIFYING FIRMS
GLOSSARY

LIST OF FIGURES

	Page
Figures l–l. Play Area Planning and Design Process	1–2
2–1. Neighborhood Parks and Play Lots.	2–2
2–2. Community Park	2-2
3-1. Site Inventory	3–3
2-2. Site Analysis	3-5
4-1. Play Area Components and Design Elements	4–2
4-2. Composite Structures, Freestanding Structures, and Play Events,	4–2
5–1. Play Lot (6 Weeks to 5 Years)...	5–3
5-2. Play Lot– Option l (5 to 9 Years).	5–3
5–3. Play Lot—Option 2 (5 to 9 Years).	5–4
5–4. Play Lot (6 Weeks to 9 Years)	5–5
5–5. Neighborhood Park—0ptionl (9 to 15 Years),	5–6
5–6. Neighborhood Park—Option 2(9 to15 Years)	5–7
5-7. Community Park (O to 15 Years)	5–8
6-1. Conceptual Design	6-2
7–1. Protective Barrier Requirements	7–4
7–2. Adjacent Play Equipment Without Overlapping Use Zones	7–5
7–3. Typical Use Zone....	7–5
7–4 Typical Overlapping Use Zone..	7-6
8–1. Transfer Point to Sand Surface	8-3
10-1. Rung Ladder	10-2
10-2. Step Ladder	10-2
10-3 Stairway	10-3
10-4. Ramp Not for Wheelchair Use..,	10-3
10-5. Stepped Platform	10–4
10-6. Ramp for Wheelchair Play Equipment Access	10–4
10-7 Transfer System	10-5
10-8 Balance Beam	10-5
10–9. Two Balance Beams With Overlapping Use Zones,	10–6
10-10. Banister Slide	10-6
10–11. Chinning and Turning Bar	10–7
10-12 Clatter Bridge	10–7
10–13. Climber Composed of Rungs	10-8
10–14. Climber With Interior Bars	10-9
10–15. Arch Climber	10–9

	Page
10–16. Net Climber	10–9
10–17. Fire Pole	lo–lo
10–18. Game Panel	lo–lo
10–19. Horizontal Ladder	10–11
10–20. Parallel Bars	10–12
10–21 Playhouse	10-12
10–22. Ring Trek	10-13
10–23. Sand Table	10–13
10–24. Accessible Sand Table	10–14
10–25. Slide	10–14
10–26. Slide Use Zone	10–15
10–27. Spring Rocking Equipment	10–15
10–28. Stationary Bridge	10-16
10–29. To-Fro Swing	10-16
10–30. Swing Use Zone,	10–17
10-31. To-Fro Swing Use Zone Accessibility Guidelines	10–18
10–32. Rotating Swing	10-18
10–33. Rotating Swing Use Zone	10–19
10–34, Track Ride	10–19
10–35. Tunnel	10–20
10–36. Composite Play Equipment With Side-by-Side Events	10–21
10–37. Composite Structure (12 to 24 Months)	10–22
10–38. Composite Structure (2 to 5 Years)	10–23
10–39. Composite Structure (5 to 12 Years)	10–24
12–1. Headroom Along Pathways	12–3

LIST OF TABLES

Tables		Page
2–1	Criteria Guidelines for Unsupervised Play Areas	2-2
2–2	Soil Types and Drainage Properties	2–3
4–1	Priority Play Area Components by Age	4-3
4-2	Recommended Play Events by Age Group	4–4
4–3	Play Events and Primary Play Activities.	4-5
7-1.	Recommended Composite Structure Platform Heights	7–2
7-2.	Maximum Recommended Play Equipment Heights	7-3
8-1	Play Events and Accessibility	8-5
9-1	Maintenance Requirements for Play Area Components	9-1
10–l.	Freestanding Equipment and Composite Structure Play Events	10- 1
10–2.	Inappropriate Play Events for Unsupervised Play Areas	10–20
11-1.	Highest Accessible Equipment Height	11–2
11–2.	Recommended Installed Depths for Loose-Fill Safety Surfacing.	11-3
11–3.	Wood Product Material Specifications	11-4
11-4	Sieve Analysis of Sand and Gravel..	11–6

CHAPTER 1

INTRODUCTION

1-1. Purpose.

This manual establishes guidance for planning and designing unsupervised outdoor play areas to meet child safety and child development requirements. By applying this guidance, a designer can create play areas at military installations that will provide a play program that meets the needs of children with and without disabilities.

1-2. Scope.

The manual provides guidelines and recommended site layouts for designing unsupervised outdoor play areas for children through age 15. Because of differing child safety and child development requirements, guidance is provided to meet the needs of three age groups: 6 weeks to 5 years; 5 to 9 years; and 9 to 15 years. Detailed design guidance is provided for designing three types of play areas: play lots serving children ages 6 weeks to 5 years or 5 to 9 years; neighborhood parks serving youth ages 9 to 15 years; and community parks serving all age groups.

1-3. References.

Appendix A contains a list of references used in this manual.

14. Definitions.

A glossary in the back of this manual provides definitions for words and phrases common to outdoor play area design.

1-5. Supervised Play Areas.

Supervised play areas differ from unsupervised play areas in a number of ways. Play areas are supervised by trained recreation or child development staff, the play area is used to implement a program of developmental play activities, and daily safety inspections are performed. Supervised play areas provide opportunities to expand the play program to include activities that may be too risky or difficult to maintain in unsupervised play areas.

1-6. Play Area Planning and Design Process.

Once the need for a play area is identified, the play area planning and design process can begin. Figure 1–1 illustrates the process which is the basis for this technical manual.

a. Form a Play Area Committee. A committee of installation staff and community representatives should be formed to oversee the play area planning and design process and participate in design review.

b. Select the Site. Site selection should be coordinated with the installation master plan, and should consider the type of play area provided and the site selection guidance presented in this manual. A new site may be selected or an existing play area may be renovated.

c. Conduct the Site Analysis and User Needs Analysis. AH documents relevant to the play area design should be collected. Research and analysis should include a user needs analysis and a site inventory and analysis. During this process, the designer should coordinate with the play area committee.

d. Develop Design Criteria. Based on the information gathered, a design criteria report should be developed for the proposed play area. Once design criteria is identified, the suitability of the proposed site should be reevaluated based on this criteria. The play area committee should review the proposed design criteria.

e. *Determine Play Area Relationships. An* adjacency diagram should be selected from this manual that best reflects the play area design criteria and ages of the primary user group.

f. Develop the Design Documents. The designer will adapt the selected adjacency diagram to the site. The site-adapted adjacency diagram will be used to create a conceptual design and cost estimate. The conceptual design should be reviewed by the play area committee. Based on the conceptual design, the designer will produce the construction drawings and specifications. If sufficient funds are not available, a phased development plan will be created. The final design documents should be reviewed by the play area committee.

1-7. The Play Area Committee.

The civil or installation engineer should organize a committee to oversee the play area planning and design process. The committee may also be responsible for fundraising and organizing self-help activities to support play area development. The committee size varies with the size of the proposed project. One committee should be organized annually to oversee all play area projects. The designer should work closely with this committee throughout the design process.

a. Community Representatives. The committee should include parents of children who will use the

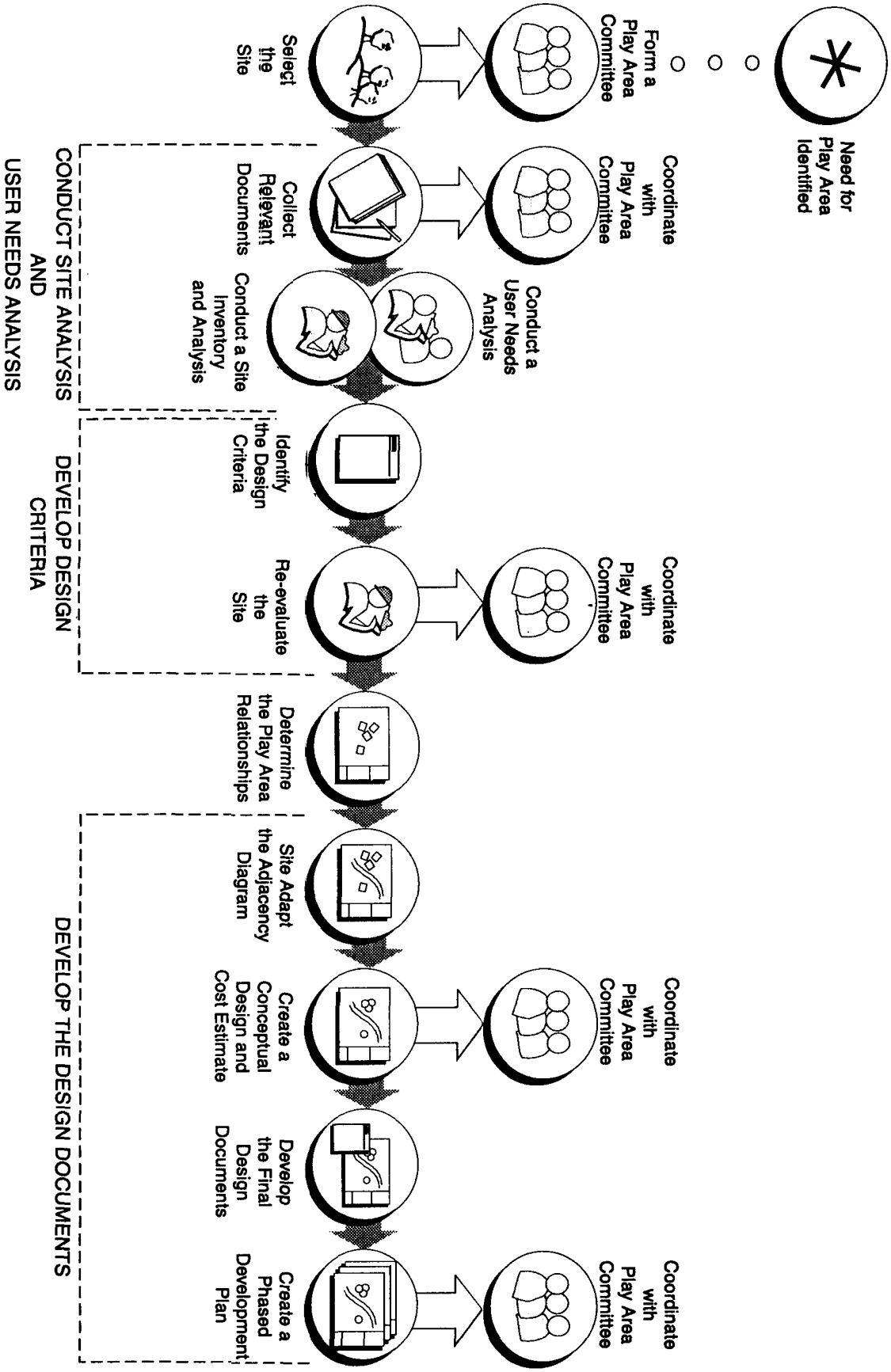

Figure 1-1. Play Area Planning and Design Process.

play area. Children and youth may also be included as members. Residents with disabilities and parents of children with disabilities should be represented.

b. Installation Staff Representatives. The following installation staff members should be represented on the play area committee:

(1) *Safety Manager* The safety manager will ensure that the play area complies with child safety requirements as described in this manual.

(2) *Child Development Services (CDS) Representatives.* The Child Development Center Director and Child Development Services Coordinator will provide input on child development needs, the needs of family daycare providers, and child safety requirements. On most installations, CDS staff are the installation child safety experts.

(3) *Youth Services Representatives.* Youth services representatives should also provide guidance on child safety and child development requirements.

(4) *Site Designers and Landscape Architect Representatives.* The staff site designer and landscape architect should ensure that the proposed play area meets the needs of residents. In addition, designers should ensure that a maintenance plan is created to provide ongoing maintenance to meet child safety requirements and accessibility guidelines.

(5) Civil *or Installation Engineer Representatives.* The maintenance staff should review the proposed design and understand the maintenance tasks necessary to meet safety and accessibility needs. Maintenance staff input will assist in aligning the proposed design concepts to available maintenance resources.

(6) *Industrial Hygiene Representatives.* Industrial hygiene representatives should ensure that play areas meet health requirements.

(7) *Provost Marshal Representative.* The provost marshal should ensure that public safety is addressed in the play area design.

CHAPTER 2

SITE SELECTION

2-1. Introduction.

The selection of a site for an unsupervised outdoor play area should be coordinated with the installation master plan. Military facility planning standards will serve as a guide for play area planning (TM 5–803–12; AFI 32–1024; MIL HDBK 1190). In addition, site selection should consider the type of play area to be provided and general site selection guidance presented in this chapter. A new site may be developed or an existing play area may be renovated.

2-2. Types of Unsupervised Play Areas.

Three types of unsupervised play areas are recommended: play lots, neighborhood parks, and community parks. Location, number of housing units served, travel distance from housing units, age of children, and space requirements determine the type of play area. Table 2–1 provides a summary of criteria guidelines for each type of play area. The recommended space requirements should be verified during planning and design based on installation population, community needs, and design criteria.

a. Play Lots. Play lots will be designed to meet the play needs of two age groups within a family housing area: ages 6 weeks to 5 years and ages 5 to 9 years. Separate play lots maybe designed for each age group at different locations or one play lot may be designed to serve both age groups. A variety of play opportunities, such as sand play, dramatic play, and pathways for wheeled toys, will be provided to foster child development. Figure 2–1 illustrates the provision of play lots within a family housing area.

(1) *Location.* Because children in these age groups require close parental supervision, play lots should ideally be located within sight lines of housing and should not require the crossing of a street to reach the play area. Families should be able to walk to the play lot in 5 minutes or less.

(2) *Facility Standard.* One play lot will be provided for 30 housing units. It should accommodate 15 to 35 children. Separate play lots may be designed for each age group at different locations or one play lot may be designed to serve both age groups.

(3) *Space Requirements.* Three hundred and twenty-five square meters (3,500 square feet) will be required for each play lot.

b. Neighborhood Parks. Neighborhood parks provide play opportunities for youth ages 9 to 15 years within the family housing area. The parks include small-scale sports facilities, such as basketball hoops and grassy fields, as well as tables and seating areas. Manufactured play equipment may also be included. Figure 2–1 illustrates the location of neighborhood parks within a family housing area.

(1) *Location.* The park will be located at the edge of housing areas without requiring the crossing of a heavily traveled street to reach the play area. It will be connected to family housing by a bike path or sidewalk that is separated from vehicular traffic. It should be located within a 5- to 10-minute walking distance from housing units.

(2) *Facility Standard.* One park will be provided for 150 housing units. It should accommodate 30 to 50 youth as shown in Table 2–1.

(3) *Space Requirements.* Seven hundred square meters (7,500 square feet) will be required for neighborhood parks.

c. Community Parks. Community parks serve the entire installation (TM 5-803-12). The parks are used for family recreation and may include play areas for 6 weeks to 5 years, 5 to 9 years, and 9 to 15 years. Sports facilities, group picnic areas, nature trails, and other recreational facilities may also be provided. Users may access the park by privately owned vehicles, bicycles, or public transportation. Young children will be transported by parents, and offstreet parking may be provided. Figure 2–2 illustrates the location of community parks on an installation.

(1) *Location.* Community parks may be associated with a significant natural resource, such as a nature area, creek, lake, etc. The park will be located on a bus route if public transportation is available.

(2) *Facility Standard.* One or two community parks should be provided per installation as shown in Table 2–1. The need is determined by estimating the current and future demand for the park and reviewing facility standards (TM 5–803–12).

(3) *Space Requirements.* For community parks, 24,275 to 40,475 square meters (6 to 10 acres) of open space should be provided per 1,000 installation residents. The amount of open space allocated specifically to children's outdoor play areas within the community park should be determined during the planning process based on safety and design considerations.

Table 2–1. Criteria Guidelines for Unsupervised Play Areas.

Type of Play Area	Age Group Served			Number of Facilities Per Housing Unit	Child Capacity	Area Provided For Play Areas
	6 weeks - 5 years	5-9 years	9-15 years			
Play lot	✘	✘		1 per 30	15-35	325 m^2 (3,500 $ft.^2$)
Neighborhood park		✘	✘	1 per 150	30-50	700 m^2 (7,500 $ft.^2$)
Community park	✘	✘	✘	1 - 2 per installation	*	*

* Child capacity depends on design; area should accommodate adequate use zones for manufactured play equipment.

X Suitable play area

2-3. Site Selection Guidance.

In addition to space requirements and location, several other characteristics should be evaluated when selecting sites for each type of children's play area. A site visit is required to fully evaluate site suitability, and should consider circulation and access; former land use; adjacent land uses; visibility; topography; existing utilities; drainage; microclimate; and existing vegetation.

a. Circulation and Access. Safe pedestrian, bicycle, and vehicular access to the play area, and access for people with disabilities will be considered in selecting locations for children's outdoor play areas.

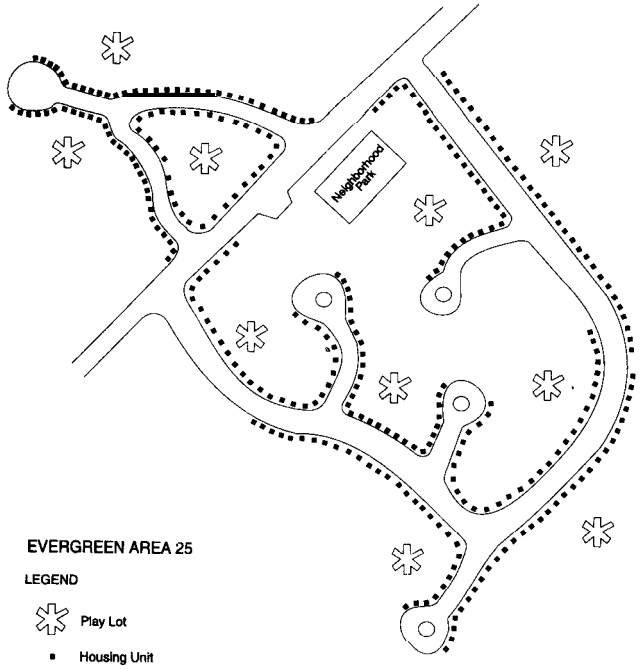

Figure 2-1. Neighborhood Parks and Play Lots

(1) Installation Trail System. A trail system that is separated from traffic circulation and connects housing, community facilities, and play areas is highly desirable. This circulation system should be addressed in the installation master plan. The master plan should be evaluated to determine the location of existing or proposed trails, and to determine the potential for locating play areas near these trails.

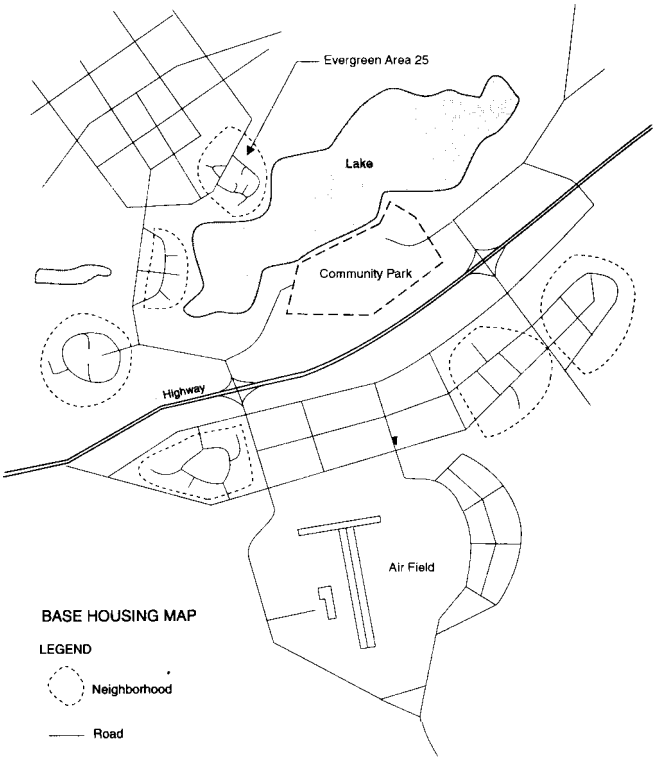

Figure 2–2. Community Park.

(2) *Service Vehicle and Emergency Access.* Access for maintenance, emergency, and service vehicles will be provided to all play areas.

b. Former Land Use. Sites formerly used for landfills, industrial use, or military training will not be used for play areas.

c. Adjacent Land Uses. When selecting sites for children's outdoor play areas, adjacent land uses will be considered.

(1) *Compatible Land Uses.* Children's outdoor play areas should be located near family housing, schools, recreation centers, community gardens, chapels, outdoor recreation areas, or open space.

(2) *Incompatible Land Uses.* Play areas will not be located near airfields, railroads, maintenance facilities, industrial areas, storage and supply areas, training and range areas, troop housing, or administrative areas. Areas near sources of loud noise, air pollution, or high traffic volume will be avoided.

d. Visibility. Sites that allow easy observation by adults from adjacent housing, recreation areas, streets, or other use areas should be selected.

e. Topography. Whenever possible, sites with a variety of topographic characteristics should be selected. Natural topographic features such as mounds and slopes increase the desirability of a site for use as a play area. Ball fields and ball courts require flat locations. Sites that require extensive site work to function as a play area should not be selected. Dangerous features, such as sudden drop-offs, topography that creates blind spots, or slopes that prohibit disabled access are cause for rejecting a site as a potential play area location.

f. Existing Utilities. Utilities should be analyzed to determine their location, availability, and capacity to satisfy anticipated play area needs. Sites with utilities that will support play area needs and will not expose children to hazards should be selected. Hazards include drop inlets and manhole covers.

(1) *Water.* When possible, play areas should be located near existing potable water lines. It is recommended that play areas have access to water for drinking, play activities, and maintenance. For community parks, access to water lines is also needed for restroom facilities.

(2) *Electricity.* The need for electricity should be evaluated. If night use of play areas is anticipated, access to electrical lines should be considered. However, play areas will be located away from electrical lines and transformers. An electromagnetic field specialist should be consulted to determine siting requirements.

(3) *Telephones.* For community parks, sites that allow telephone service for emergency communication should be selected.

(4) *Sanitary Sewer* For community parks, access to sanitary sewer lines is also needed for restroom facilities.

g. *Drainage.* Soil types and drainage will be considered when selecting a play area location. Wet, boggy, slow-draining soil conditions affect the location, construction, cost, and safety of play areas.

(1) *Positive Drainage.* Sites with grades that promote positive drainage should be selected. If additional drainage is required, the construction costs should be evaluated before selecting the site.

(2) *Soil Types and Drainage.* Soil type plays a major role in site drainage. Loamy-sandy soil allows water to percolate through the soil and provides good drainage. For soil with high clay content, more deliberate drainage solutions may be necessary. Table 2–2 illustrates the drainage properties of various soil types.

(3) *Storm Sewers.* The adequacy of the system and necessary improvements needed should be considered during site selection. Whenever possible, sites should be selected where storm drains may be located outside the play area. Drainage grates will never be located in play equipment use zones unless grates are covered with synthetic impact-attenuating surfacing.

h. Microclimate. Microclimate conditions are weather patterns unique to a site. These conditions are influenced by the site's topography, landscape, and orientation. The microclimate may increase or decrease the site's attractiveness and suitability as a play area location. Wind, sun, heat, cold, and dampness are climatic conditions that can affect a site's suitability as a play area. For example, if a site has large shade trees, high rainfall, and features that block morning sun, the specific site may

Table 2–2. Soil Types and Drainage Properties.

Division	Soil Description	Drainage
Gravel and gravelly soils	Well-graded gravel, or gravel-sand mixture, little or no fines	Excellent
	Poorly graded gravel, or gravel-sand mixtures, little or no fines	Excellent
	Silty gravels, gravel-sand-silt mixtures	Poor
	Clayey-gravels, gravel-clay-sand mixtures	Poor
Sand and sandy soils	Well-graded sands, or gravelly sands, little or no fines	Excellent
	Poorly graded sands, or gravelly sands, little or no fines	Excellent
	Silty sands, sand-silt mixtures	Fair
	Clayey sands, sand-clay mixtures	Poor
Silts and clays LL<50	Inorganic silts, rock flour, silty or clayey fine sands, or clayey silts with slight plasticity	Poor
	Inorganic clays of low to medium plasticity, gravelly clays, sitly clays, lean clays	Very Poor
	Organic silty-clays of low plasticity	Very Poor
Silts and clays LL >50	Inorganic silts, micaceous or diatomaceous fine sandy or silty soils, elastic silts	Poor
	Inorganic clays of high plasticity, fat clays	Very Poor
	Organic clays of medium to high plasticity, organic silts	Very Poor
Highly organic soils	Peat and other highly organic soils	Poor

LL - Liquid limit.

be too muddy on most days of the year for children's play. Some poor microclimate conditions may be attenuated during play area design.

i. Existing Vegetation. The presence of existing vegetation is an important selection criteria. Existing vegetation can increase the attractiveness, comfort, and play opportunities of a proposed site.

2-4. Existing Play Equipment Areas.

When evaluating a site with existing play equipment, the play areas and equipment should be inspected for compliance with child safety and development requirements presented in this manual. If it is necessary to relocate, remove, or replace equipment to meet child safety requirements, a design for play area renovation will be necessary. The site suitability should be reevaluated using the guidance presented in this chapter. The design process for both renovation and new construction is identical. Renovations may have more limitations and, therefore, may require more detailed and careful design.

CHAPTER 3

SITE ANALYSIS AND USER NEEDS ANALYSIS

3-1. Introduction.

After the site has been selected, the design process will begin with a thorough analysis of the site and the needs of play area users. Input should include information obtained during site visits, from community members, and from relevant guidance documents.

3-2. Coordinate with the Play Area Committee.

The designer will coordinate with the play area committee throughout the design process. The committee may participate in assessing user needs and reviewing preliminary findings of the site inventory and analysis.

3-3. Collect Relevant Documents.

The installation engineer is a resource for obtaining relevant documents needed for the site design.

a. Site Maps. Topographic and infrastructure maps are essential for good design decision making. Topographic maps define grade configurations and landforms. An infrastructure or utilities map includes electrical elements located underground, overhead, and at ground level; sewer and water lines; storm drains; and clean outs.

b. Installation Master Plans and Design Guidelines. Installation design guides and master plans should be obtained. Children's outdoor play areas should be developed in accordance with these documents.

c. Guidance, Standards, and Regulations. All applicable documents that provide design guidance or requirements for the project should be collected. These documents address child safety, age appropriate design, accessibility, materials, and equipment specifications. This manual and applicable referenced documents (appendix A) should be included for guidance. The installation engineer will provide additional guidance documents, if necessary for special site conditions.

d. Product Information. Product information should be obtained from project files or from the manufacturer for any existing play equipment or site furnishings that will be retained in the design. This information will be used to determine the manufacturer's recommendations for equipment layout and maintenance.

e. Current Population Data. Current population distribution information should be obtained from surveys prepared annually by the family housing office.

3-4. Conduct a User Needs Analysis.

The play area design should reflect the needs of the local community who will be using, managing, and maintaining the site. Therefore, the designer and play area committee should work together to gather opinions about local community needs and desires regarding the proposed play area. This community involvement encourages a sense of ownership and responsibility to the finished play area. Some effective methods for involving user groups in determining the play area goals and in selecting play area components include: community workshops, surveys and interviews, walking tours, field trips, and special events, such as play days, mural-making, or model-building activities. Participants may include the play area committee, installation community members, and children and youth. The user needs analysis results should be documented in a written report.

a. Community Workshops. Community workshops are discussion sessions designed for older children, teens, and adults. Creating an environment that fosters free expression is essential for success. When a large group is expected, participants should be divided into small groups during a portion of the workshop to allow greater participation. Questions should be prepared to prompt the discussion. Participants' comments should be recorded. Comments also should be summarized in a workshop report. Besides discussion, community workshops may incorporate walking tours, model-building, and other activities.

b. Interviews. Personal interviews maybe used to gather opinions of community leaders and representatives of community groups. Interview results provide direction for other aspects of the community involvement program, such as the development of workshop agendas or survey questions.

c. Community Surveys. Telephone, mail-in, and door-to-door surveys extend participation beyond residents who normally attend meetings. These techniques are valuable tools for assessing needs and gathering community opinions, ideas, suggestions, and comments from children, youth, and adults. The surveys should be carefully developed and field tested with the intended audience. Survey

staff should be trained to ensure consistency and survey reliability. A representative sample of community members should be surveyed. A report should be developed to document the survey and interview results.

d. Walking Thurs. Walking tours of the proposed site allow participants to directly observe and respond to the environment. Tours are suitable for both adults and children. The tour route may be preplanned, or participants may lead the designer to both favorite and least favorite places. Walking tours provide opportunities to inform community members about environmental assets and liabilities. The designer or committee members may gather information from participants during the walking tour. The walking tour should be followed by a discussion and observations should be recorded.

e. Field Trips. Participants may tour play areas in other communities. The designer or committee members can then gather information about what participants liked and did not like about each play area. This input can be summarized in a report.

f. Special Events. A variety of activities, such as mural-making, model-building, and play days, create enjoyable community events that can be used to gather information for play area design. These events may be geared toward children, youth, or entire families. Special events provide an opportunity for media attention and project publicity. During the activity, facilitators can gather community opinions through discussion with participants. Discussion with the participants is more important than the actual product or activity.

3-5. Conduct a Site Inventory and Analysis.

A site inventory will be conducted to identify the natural, manmade, and cultural features that may affect the play area design. Based on the inventory, a site analysis document will be developed to identify design constraints and opportunities.

a. Site Inventory. Site inventory information should be gathered during site visits, and from old site plans, interviews, anti reference materials. All information should be recorded on a site plan. Figure 3–1 provides an example of a site inventory.

(1) *Cultural Features.* The character of the site, current use patterns, well-used features on the site, and how the proposed play area will relate to the existing site should be noted. Information about the site's history and the regional history should be obtained. Special historical, cultural, or ethnic features may make play area development desirable or undesirable or may present design opportunities. The installation master plan, user groups, site manager, maintenance personnel, or observations during site visits may provide relevant information.

(2) *Topography and Natural Features.* Site topography can suggest opportunities for spatial organization and play uses. The presence of both sloping and flat surfaces can enhance play opportunities. Natural topographic forms and features such as mounds, large boulders, outcropping, and slopes should be located, preserved, and integrated into the play area design. Topographic conditions that may effect the play area location and design should be identified and recorded. These include water collection areas, high and low points, flat areas, hills, valleys, and ridges. A topographic map should be prepared if one is not available. Sources for this information include aerial and field-run topographic surveys of the site.

(3) *Existing Utilities.* Existing utility surveys, future development maps, civil or installation engineers, and on-site field observations should be used to identify the location and capacity of current utilities. Water, electricity, storm and sanitary sewers, utility boxes, and telephone lines should be considered in relationship to play area needs and evaluated to determine needed improvements. Potential play area hazards created by utilities should be identified and mitigated.

(4) *Soils and Drainage.* Soil types and drainage should be considered when locating play area components. During the site inventory, soil types should be mapped and evaluated for their ability to support weight (structural bearing capacity), susceptibility to erosion, water permeability, and presence of surface and subsurface rock that may affect construction costs. The ability to provide positive drainage also should be evaluated. A combination of surface and subsurface drainage should be considered for all sites. Sources for this information include the site plan, the installation master plan, the U.S. Soil Conservation Service, and the U.S. Geological Survey.

(5) *Visual Resources. Any* significant views afforded by the site should be noted. These views present design opportunities, such as observation points.

(6) *Microclimate.* Microclimate should be considered when selecting activities, preparing the site layout, and selecting construction materials. Wind, sun, heat, cold, drifting snow, sand, and dampness are climatic conditions that may need to be mitigated through the design. Prominent microclimate characteristics, such as sun, shade, and wind direction should be mapped during the site inventory. Sources for this information include site investigations and persons familiar with seasonal site characteristics.

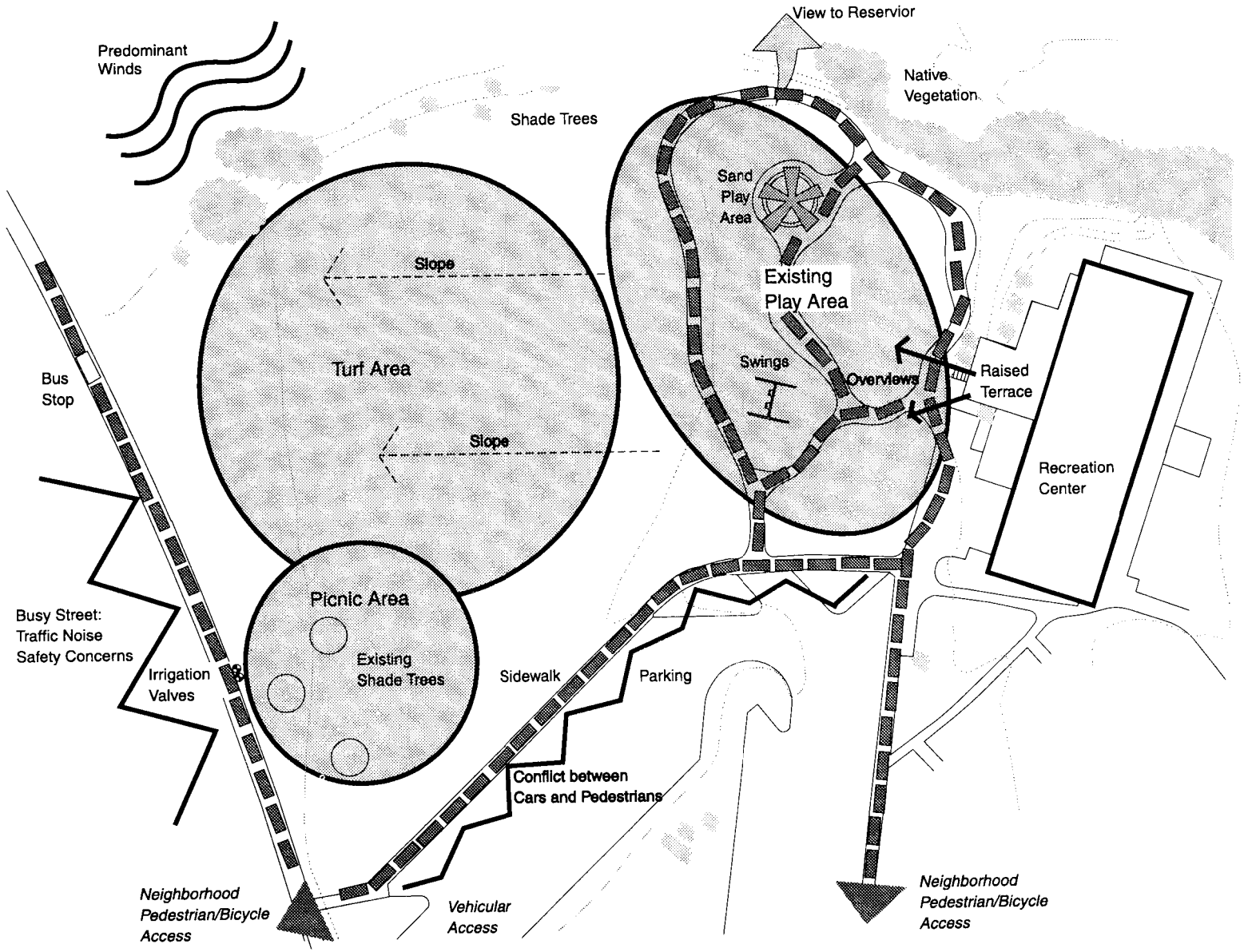

Figure 3-1. Site Inventory.

(7) *Existing Vegetation.* The type, size health, and location of existing plant materials should be noted during the site inventory. These plants should be retained whenever possible. Toxic and poisonous plant materials should be identified for removal.

(8) *Existing Play Equipment and Structures.* Based on the results of a safety inspection and structural analysis of existing play equipment or structures, equipment and structures that can be retained, relocated, or removed should be identified and located on the site inventory.

(9) Adjacent Land *Uses.* The need for screening or visibility from adjacent areas should be noted. Traffic or other adjacent land use concerns should be indicated.

b. Site Analysis. Based on the site inventory, a site analysis will be developed to record the existing site conditions, opportunities, and constraints. This information should be mapped on a site plan (fig 3–2). The site analysis also should be described in a written report that documents issues and possible solutions.

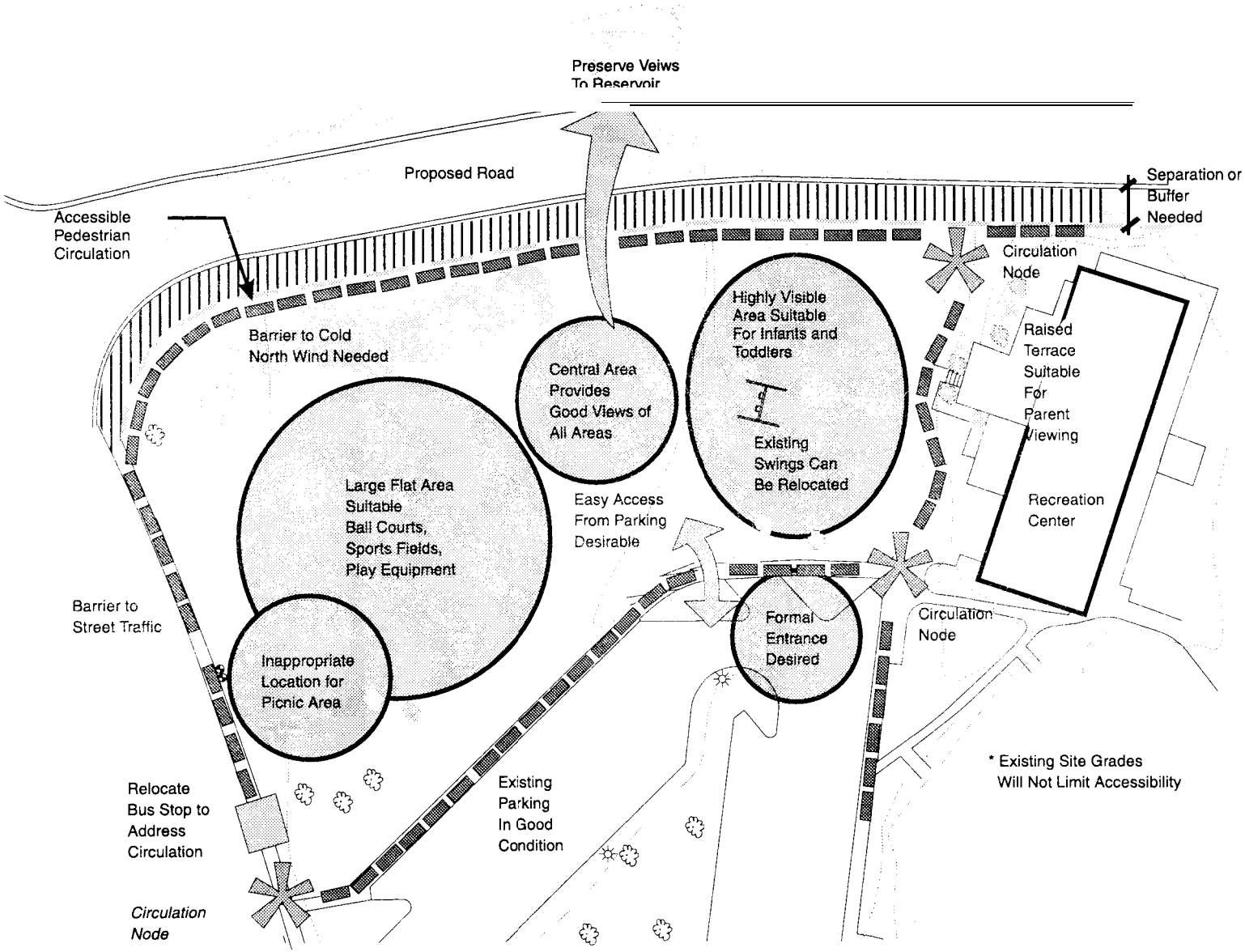

Figure 3-2. Site Analysis.

CHAPTER 4

THE DESIGN CRITERIA

4-1. Introduction.

The design criteria document is the basis for design. It identifies all requirements for the design of the outdoor play area, including findings of the site inventory and analysis, the user needs analysis, and relevant guidance provided in standards, regulations, and the installation master plan. Based on this information, the designer will develop a conceptual (10%) design that identifies selected play area components and the site layout. The play area design should be well-defined and age-appropriate. A play area primarily composed of manufactured play equipment or freestanding play equipment scattered throughout a family housing area does not fully meet this requirement.

4-2. Confirm the Age Group Served.

The play area designer and play area committee should review population data and the results of the user needs analysis. Based on these findings, the age group to be served by the play area will be confirmed. This age group will be documented in the design criteria report.

4-3. Identify Play Area Goals.

The goals for the play area should identify the play area's key developmental and environmental benefits. The goals should also address management issues, such as maintenance and implementation of standards and regulations. These goals are part of the design criteria report.

4-4. Play Area Components and Manufactured Play Equipment.

To create a diverse play area, a variety of components that support children's physical, cognitive, emotional, and social development should be included. A play area component creates a defined setting that supports a particular type of play activity, such as dramatic play, or supports user safety, comfort, and convenience. Play area components may include: the entry area; pathways; sports and games; dramatic play; sand play; gardens; gathering places; manufactured play equipment; plant materials; land forms; separation and barriers; signage; and parking.

a. Play Area Components. In figure 4-1, the play area includes four components: manufactured play equipment, dramatic play, pathways, and the entry area. Each play area component may consist of one or more design elements. For example, the dramatic play component in figure 4-1 includes the following design elements: platforms, shade, and a bench.

b. Manufactured Play Equipment. Play equipment is one of many types of play area components that comprise a play area. Manufactured play equipment should also be carefully selected to ensure that it meets the safety requirements for the primary age group using the play area, provides a variety of play activities to meet developmental needs, and meets the needs of children with disabilities.

(1) *Play Events.* Manufactured play equipment, such as climbers, slides, and track rides, that provides one or more play activities is called a play event (fig 4-2). For example, the play activities provided by the manufactured play equipment in figure 4--2 may include climbing, sliding, and dramatic play.

(2) *Freestanding Structure.* A single play event, such as swings, rocking animals, or climbers, may be installed as a freestanding structure that is not functionally linked to any other play event. In figure 4-2, the slide is installed as a freestanding structure.

(3) *Composite Structure.* In addition, two or more play events may be combined to form a composite structure. In figure 4-2, the composite structure includes the following play events: ring climber, slide, horizontal ladder, and track ride.

4-5. Selection Criteria for Play Area Components.

When selecting play components, child development needs, accessibility, maintenance requirements and costs should be considered.

a. Child Development. A diverse play area that supports child development will include a range of play activity, sensory variety, spatial complexity, graduated challenge, and linkage and flow between play area components. Chapter 5 illustrates how play area component may be combined to create diverse play areas.

(1) *Range of Play Activity.* Children develop physically, cognitively, emotionally, and socially through interaction with the environment and each other. Most existing play areas emphasize gross motor activity and sensory activity. Properly designed and selected play area components should also support fine motor activity, social play, and other developmental needs. A given play area component can support different developmental needs depending upon how it is used by a child. For example, manu-

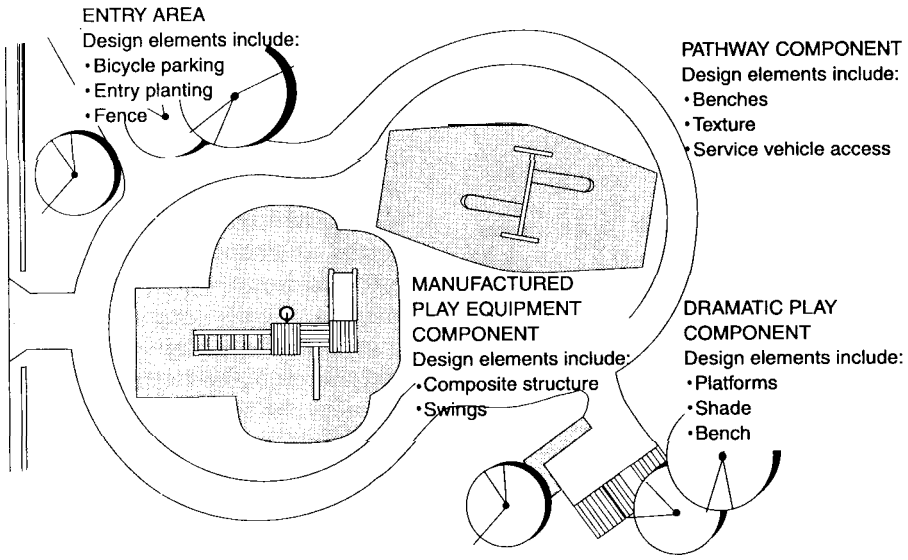

Figure 4-1 Play Area Components and Design Elements

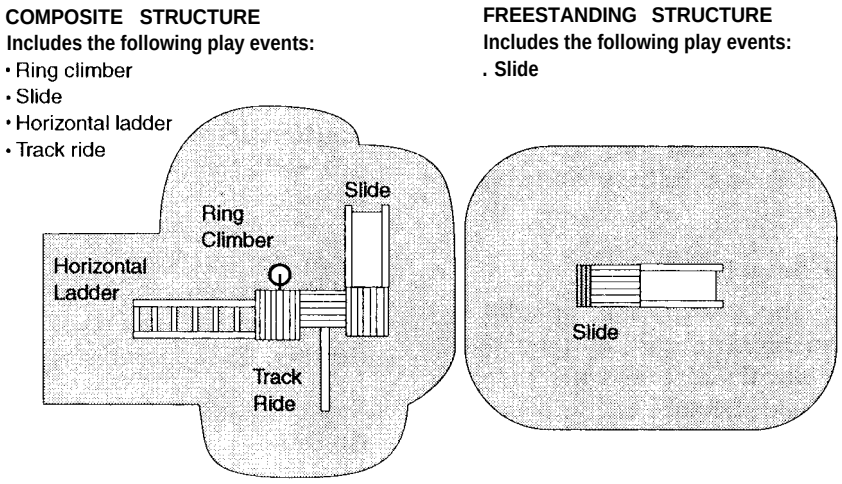

Figure 4-2. Composite~Structures, Freestanding Structures, and Play Events

factured play equipment cannserve as a hangout for socializing, a ship for dramatic play, or a tool for developing motor skills. Play area components that support a wide range of activities should be selected.

(2) *Sensory Variety.* A variety of sensory experiences enhances physical and cognitive development. In addition to movement activities, varied sounds, textures, colors, and light should be provided in the play area by incorporating a variety of natural and manmade materials in the design.

(3) *Spatial Complexity.* A variety of spatial experiences should be provided to assist children in learning concepts such as up and down, over and under, in and out, right and left, big and little, and deep and shallow. Manufactured play equipment and land forms are two ways that these experiences can be supported by the play area design.

(4) *Graduated Challenge.* Varied levels of challenge should be provided in the play area. For example, a range of upper body challenges may be provided with manufactured play equipment by selecting play events that include turning bars, chinning bars, horizontal ladders, and track rides. These require a varying level of skill. Providing children with choices creates opportunities for all children to succeed. Varied levels of challenge also helps avoid loss of self-esteem that may occur when a child is limited to an activity which is too challenging.

(5) *Linkage and Flow.* One challenge of physical development involves children mastering the move-

ment of their bodies through space in a continuous sequence. Providing connection between play area components facilitates this developmental task during play. Linkage and flow between play area components should be enhanced by maintaining appropriate play area relationships and by designing pathways that connect all play area components.

b. Accessibility to Children and Adults With Disabilities. Play area components will be accessible to children and adults with disabilities. In addition to wheelchair users, the needs of children and adults who walk with canes, walkers, or crutches; who have limited use of the upper body; who have visual or hearing disabilities; or who have developmental disabilities will be considered. A diverse play area that includes a variety of play area components has the greatest potential for meeting the needs of all users. Rather than developing separate "handicapped" play areas, integrating all children in the same play setting will be emphasized. Most play area components can be made accessible. This manual provides guidelines for designing play areas to meet the needs of children with and without disabilities.

c. Maintenance and Cost. Maintenance requirements and cost are additional considerations in selecting play area components.

(1) *Maintenance Requirements.* Play area components require varying levels of maintenance. Ongoing maintenance is critical to sustaining safe play areas for children. During the design process, play area maintenance requirements should be considered and defined. Designers will select play area components that match the available maintenance resources. On installations with few maintenance resources, low maintenance components should be selected.

(2) *Cost.* The initial cost, anticipated useful life, and the maintenance cost should all be considered when selecting play area components. The sum of these costs represents the life cycle cost of the play area component. For example, sand safety surfacing has a low initial cost. However, when the anticipated useful life and maintenance costs of the surface are considered, this surface may not always provide the best value when compared to other safety surfaces. When needed to guide decision-making, a life cycle cost comparison should be prepared to help identify the most economical component.

4-6. Select Play Area Components.

Based on the findings of the user needs analysis and the site analysis, and the goals for the play area, play area components will be selected to meet the needs of the selected age group.

a. Age Appropriate Play Area Components. Table 4-1 identifies play area components that should be considered during this selection process. This list identifies which play area components are appropriate for a given age group. It also lists those components which are required for all age groups. These components must support child safety and child development, and must be accessible to children with disabilities. The selected components should be identified in the design criteria report.

b. Manufactured Play Equipment. Table 4-2 provides recommendations for age appropriate play events. Table 4–3 summarizes primary play activities supported by play events. Chapter 10 describes how to adapt manufactured play equipment to meet the needs of children with disabilities.

4-7. Determine Space Requirements.

The space requirements for the selected play area components should be determined. Child safety and appropriate play area relationships should be considered. Guidance for determining space requirements for manufactured play equipment is provided in this manual. The play area space requirements will be presented in the design criteria report.

4-8. Reevaluate the Site.

Once the design criteria is identified, the designer should reevaluate the suitability of the site to meet identified needs.

4-9. Coordinate with the Play Area Committee.

The designer should present the findings of the design criteria report to the play area committee for review and comment.

Table 4-1. Priority Play Area Components by Age.

Play Area Components	6 weeks - 5 years	5-9 years	9-15 years
Entry area	x	x	x
Sports and games	Low	High	High
Dramatic play	High	Medium	Low
Sand play	High	Medium	N/A
Garden	Medium	Medium	Medium
Gathering places	High	High	High
Manufactured play equipment	High	High	Medium
Plant materials	x	x	x
Landforms	x	x	x
Pathways	x	x	x
Signage	x	x	x
Parking	x	x	x

X- Components necessary for all play areas.

Table 4-2. Recommended Play Events by Age Group.

Recommended Play Event	Recommended Age Group				
	6 weeks-5 years			5-9 years	9-12 years
	< 12 months	12-24 months	2-5 years		
Balance beam			X	X	X
Banister slide				X	X
Chinning/turning bar			✘	✘	✘
Clatter bridge			✘[2]	✘	✘
Climber			✘[3]	✘	✘
Climber - arch			✘[3]	✘	✘
Climber - net			✘[2]	✘	✘
Fire pole				X	X
Game panel	X	X	X	X	X
Horizontal ladder			✘[3]	✘	✘
Parallel bars				✘	✘
Playhouse		✘	✘	✘	
Ring trek				✘	✘
Sand table		✘	✘	✘	
Slide		✘[1]	✘	✘	✘
Spring rocking equipment			X		
Stationary bridge	✘	✘	✘	✘	✘
Swing - to-fro	X	X	X	✘	✘
Swing - rotating			✘[2]	✘	✘
Track ride				✘	✘
Tunnel	X	X	X	X	X
Composite structure		X	X	X	X

[1] Recommended for ages 2 and older.
[2] Recommended for ages 3 and older.
[3] Recommended for ages 4 and older.

Table 4-3, Play Events and Primary Play Activities.

Play Event	Primary Play Activity				
	Gross Motor	Fine Motor	Social	Creative/ Dramatic	Sensory
Balance beam	X			X	X
Banister slide	X				X
Chinning/turning bar	X				X
Clatter bridge	X			X	X
Climber	X				
Climber - arch	X				
Climber - net	X			X	
Fire pole	X			X	X
Game panel		X	X		X
Horizontal ladder	X				X
Parallel bars	X				X
Playhouse			X	X	
Ring trek	X				X
Sand table		X	X	X	
Slide	X				X
Spring rocking equipment	X		X	X	X
Stationary bridge	X			X	
Swing - to-fro	X				X
Swing - rotating	X				X
Track ride	X				X
Tunnel	X			X	
Composite structure	X			X	

X - Developmental activity provided

CHAPTER 5

PLAY AREA RELATIONSHIPS

5-1. Introduction.

This chapter describes how to create a diverse play area while meeting child safety and functional requirements. This is accomplished by maintaining the appropriate functional relationships between play area components. Adjacency diagrams illustrating appropriate relationships for play lots, neighborhood parks, and community parks are included. These diagrams should be used as the basis for creating conceptual designs for the three age groups addressed in this manual.

5-2. Play Area Component Relationships.

The following guidelines for play area component relationships apply to all age groups and were used to develop the adjacency diagrams provided in this chapter.

a. Entry Area. Clearly defined entrances should be provided to orient, inform, and introduce users to the site. Entries should be connected to pedestrian and bike circulation paths, linking the play area to housing, picnic facilities, and community facilities. The entry should relate to parking areas when parking is provided. Parking must be separated from other areas with a barrier. Bike parking should be provided at all entries.

b. Sports and Games. Play areas may include small-scale sports and games, such as small turf areas and multi-use hard surface courts for ball play, running, and group games. Sports and games should be sited in relatively flat locations. These areas should be located to prevent out-of-bounds balls from interfering with traffic and other play activities. Ball walls can provide a vertical surface to focus ball play in a desired direction and can act as barriers to contain ball play activities. Gathering areas should be provided adjacent to sports and games components to provide seating for resting and for watching other children.

c. Dramatic Play. Although dramatic play occurs throughout the play area, designers can deliberately create play area components that support role play, such as a play village or performance area.

(1) *Play Village.* For children ages 18 months through 8 years, design elements, such as play houses and a water source, maybe grouped together to create a play village. Sand play should be located adjacent to the village to provide manipulative material to enhance dramatic play. Pathways should intersect the play village to provide access to the design elements and to reinforce the village character.

(2) *Performance Area.* For school-age and older children, dramatic play may include small performance areas with ground-level platforms and seating for viewers. The performance area should be positioned away from high activity areas.

d. Sand Play. Sand play should be located away from high activity areas, such as ball play areas. If a play village is provided, sand play should be located near the village. If sand is used as a safety surface in manufactured play equipment areas, separate areas for sand play should be provided away from play equipment.

e. Gardens. Community gardens are small plots of land used by children, families, or community groups for growing ornamental or edible plants. If a play village is provided, the garden should be adjacent to the play village to allow children to harvest plants for village use. Gardens should be separated from circulation pathways and should be surrounded by fencing for plant protection.

f. Gathering Places. Gathering places are comfortable areas where children, youth, and adults can sit and meet, or where infants may safely explore. Gathering places should be located to protect users from the sun and wind. In gathering places, seating should be located to provide sight lines for play area supervision. If views throughout the play area are not possible, seating should be provided in more than one location. Gathering places should be provided adjacent to sports and games to support resting and viewing.

g. Manufactured Play Equipment. Manufactured play equipment should be located to ensure sight lines needed for supervision are not blocked by the equipment. Equipment should also be located to discourage circulation through the play equipment area when children move between play area components. Swings should be located on the edge of the play area to prevent injuries that may occur when children cross the swing area to get to other play activities.

h. Plant Materials. Plant materials should be located to provide climate modification, define boundaries, serve as a visual screen, and support play activity. Shade should be provided in all play areas. Particular attention should be given to providing shade over seating areas in gathering places, over metal play equipment in manufactured play equip-

ment components, and over play areas for young children. Plant material should not be located within play equipment use zones.

i. Landforms. Landforms include natural or manmade variations in topography, and earth sculpture. If appropriate for the primary age group who will be using the play area, play area designs should be adapted to incorporate existing land forms. Manufactured play equipment may be incorporated into landforms to create access onto elevated play equipment.

j. Pathways. Pathways should be provided to allow access up to, into, and around the play area for pedestrians, strollers, bicycles, children and adults with disabilities, and maintenance vehicles. Pathways should be used to separate and define space that serves different functions. Where bicycle use is great enough to cause safety concerns for pedestrians, separate bike paths should be considered.

(1) *Pathways As Play Events.* Pathways may serve as a play event, supporting games, site exploration, and use of wheeled toys, skates, strollers, and bikes. Primary pathways are hard-surfaced and should be located to connect all play area components. Auxiliary or secondary pathways may be provided away from main activity and circulation paths for exploration. Secondary pathways may be composed of more challenging materials, such as packed earth or wood products.

(2) *Service Vehicle Access.* Maintenance access allows maintenance, police, service, and emergency vehicles to travel through the play area to provide emergency assistance and perform service tasks, such as garbage removal, mowing, and replenishing of materials. A service vehicle access route should be provided through the play area along the main pathway. The route should provide a direct connection to all areas covered with loose-fill safety surfacing, such as wood products, sand, gravel, or chopped tire.

k. Signage. Signs should be located to ensure good orientation, direct. traffic flow, and provide information about the site and programs. The need for signs depends on the type and complexity of the play area.

l. Parking. Offstreet parking areas may be provided for community parks. Parking should be located near the park entrance at a distance from active areas or picnic areas. Parking must be separated from other areas with a barrier.

5-3. Identify Needed Separation and Barriers.

When developing appropriate play area relationships, some consideration must be given to providing physical separation and barriers between play area components. Barriers, such as shrubs, pathways, and low walls, should be used to define activity areas and direct movement through the play area. When needed because of differing safety requirements, barriers should be used to separate age groups. These barriers should allow children to observe activities in other parts of the play area. Fences are only required to protect children from large bodies of water, heavily traveled streets, traffic that is hazardous to the age group using the play area, or other hazards.

a. Serving More Than One Age Group. Play area components serving different age groups should be separated with barriers, such as low walls, pathways, turf areas, or vegetation.

b. Manufactured Play Equipment. Because of differing safety needs, manufactured play equipment designed for children under 5 years old and play equipment designed for children over 5 years old should be separated with barriers, such as low walls or vegetation.

c. Type of Play. Active and passive play activities should be separated by location, pathways, or barriers, such as low walls or vegetation.

5-4. Play Lot (6 Weeks to 9 Years).

Four adjacency diagrams are provided to illustrate how the play area relationships described above should be implemented in the design of play lots. One option is provided for children 6 weeks to 5 years and two options are provided for children 5 years to 9 years. One option is provided for a single play area that serves children 6 weeks to 9 years. This option includes separation between play area components to maintain child safety.

a. Play Lot (6 Weeks to 5 Years). One option is provided for play lots that serve only children under 5 years old. The play area contains an entry area, dramatic play, sand play, a gathering place, and a pathway (fig 5–l).

(1) *Dramatic Play.* The dramatic play component for this age group is designed as a play village. It serves as the play area focal point and center of activity.

(2) *Sand Play.* Sand play is located next to dramatic play to extend play opportunities.

(3) *Gathering Place.* A gathering place for infants and parents is located to allow views throughout the play area. An infant crawl area for children under 12 months is provided adjacent to the seating and on the edge of the play area away from more active play. Shade is provided for the seating area and for the infant crawl area.

(4) *Pathway.* A pathway encircles and intersects the play village. This allows dramatic play that incorporates wheeled toys as imaginary vehices.

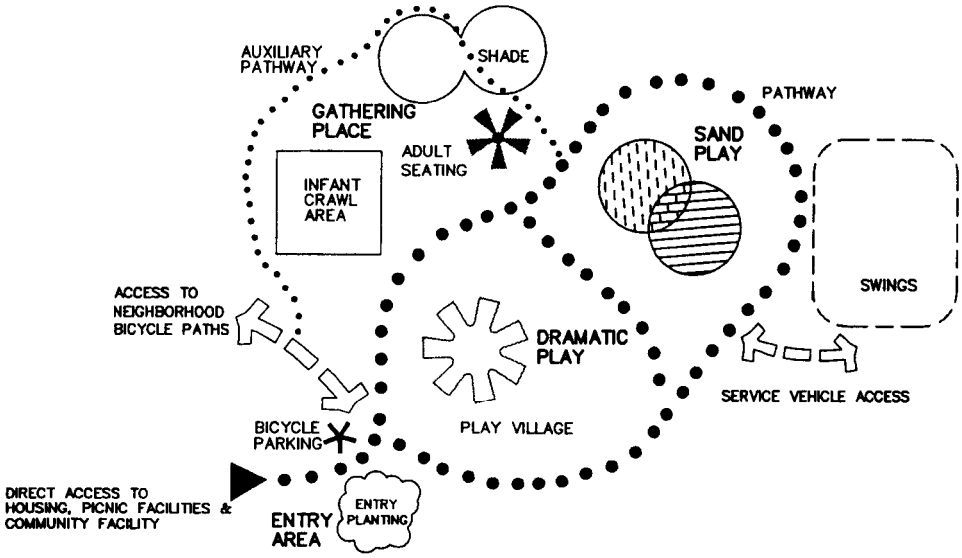

Figure 5–1. Play Lot (6 Weeks to 5 Years).

(5) *Service Vehicle Access.* A maintenance access route to the sand area is provided for ease of maintenance and replenishment of material.

b. Play Lot (5 to 9 Years). Two options for play lots are provided for children ages *5* to *9* years. Option 1 emphasizes manufactured play equipment and dramatic play. Option 2 emphasizes sports and games. The designer should select the diagram which most closely meets the needs of the site analysis and the findings of the. design criteria report. A defined entry area that connects pedestrian and bike circulation pathways to the neighborhood and to nearby community facilities is provided in both options. Pathways are also provided in both options to link all play area components.

(1) *Option 1.* Option 1 provides dramatic play and manufactured play equipment for children ages 5 to 9 years (fig 5–2).

(a) Dramatic *Play.* A ground-level platform and seating create an area for impromptu performances. Dramatic play is located away from active play on the edge of the play area. Since the area is shaded and located to provide views throughout the play area, it also serves as a gathering place.

(b) Manufactured Play Equipment. The manufactured play equipment component includes a composite play structure and swings. The swings are located on the edge of the play area. Manufactured play equipment is the focal point of the play area.

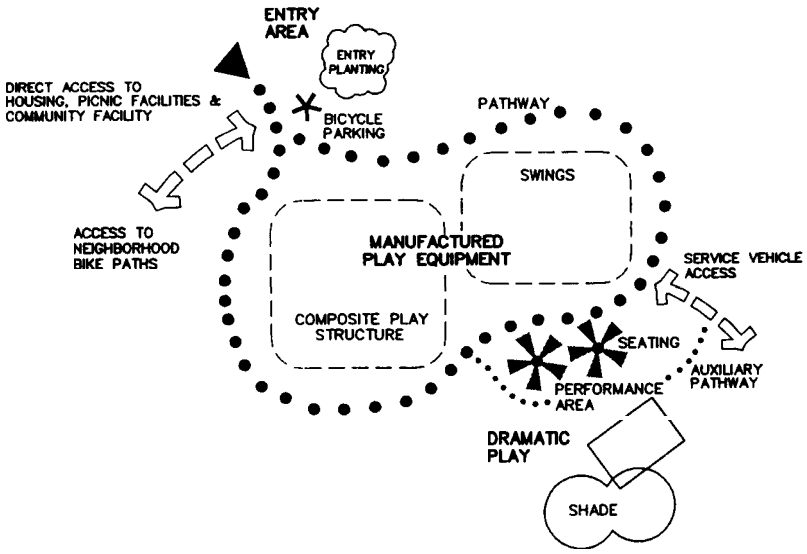

Figure 5-2. Play Lot Option 1 (5 to 9 Years).

(c) Pathways. The pathway connects all play area components and encircles the manufactured play equipment. It can accommodate bicycles.

(d) Service Vehicle Access. A service vehicle access route increases ease of maintenance.

(2) *Option 2.* Option 2 includes sports and games and a gathering place for children ages 5 to 9 years (fig 5–3).

(a) Sports and Games. The central focus of the play area is a multi-use hard surface area. A ball wall focuses ball play in the desired direction of play and helps contain the balls.

(b) Gathering Place. Shaded seating for viewing is provided adjacent to the ball play area.

(c) Pathway. The pathway is designed as access to the play area and is not intended as a bike path.

(d) Service Vehicle Access. A service vehicle access route increases ease of maintenance.

c. Play Lot (6 Weeks to 9 Years). One option is provided to accommodate children from 6 weeks to 9 years when it is necessary to combine age groups in one play lot. The play area contains an entry area, a gathering place, and a pathway (fig 5–4). Two manufactured play equipment components are designed to serve different age groups and are separated by barriers.

(1) *Manufactured Play Equipment.* One manufactured play equipment component features a composite play structure designed for children ages 5 to 9 years. A separate manufactured play equipment component designed for children under age five includes swings. Swings are located at the edge of the play area. These two components will be separated by barriers, such as low walls, turf areas, or vegetation.

(2) *Gathering Place.* Seating for adults and children is provided in a location that allows views to all parts of the play area. Shade is included.

(3) *Pathway.* A pathway encircles the play area to link all play area components and to accommodate wheeled toy play.

(4) *Service Vehicle Access.* A service vehicle access route is provided through the play area to increase ease of maintenance.

5-5. Neighborhood Park (9 to 15 Years).

Two adjacency diagrams for neighborhood parks are provided for 9- to 15-year-olds. Option 1 includes a wider variety of play area components. Option 2 emphasizes sports and games. The designer should select the diagram which most closely meets the needs of the site analysis and the findings of the design criteria report. Both options include: entry areas, sports and games, gathering places, and pathways. Pathways in both play areas are connected to neighborhood bike paths and all components within the play area.

a. Option 1. The first option for 9- to 15-year-olds includes manufactured play equipment, sports and games, and a garden (fig 5–5).

(1) *Sports and Games.* A large turf area that accommodates various sports and neighborhood activities is the focal point of the play area. In addition, a multi-use hard surface area with a ball wall is located on the edge of the play area. The ball wall directs ball play away from the pathway and entry area.

(2) *Garden.* The garden is located on the edge of the play area and is separated from active play.

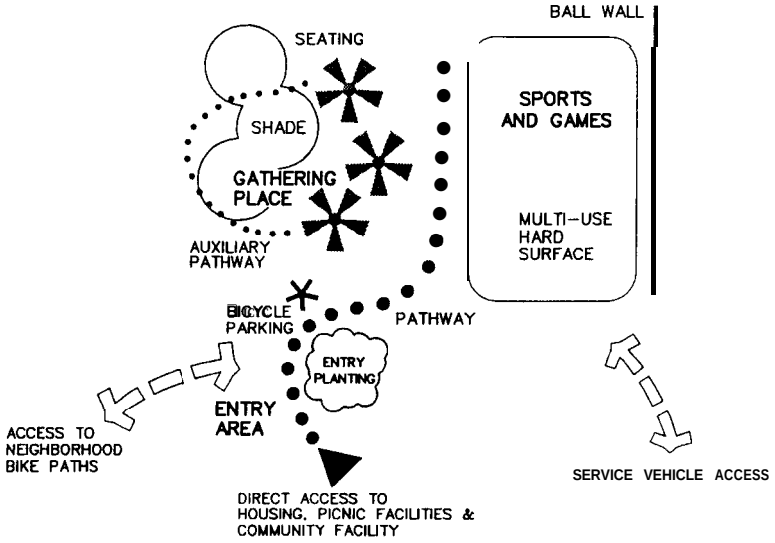

Figure 5–3. Play Lot - Option 2 (5 to 9 Years).

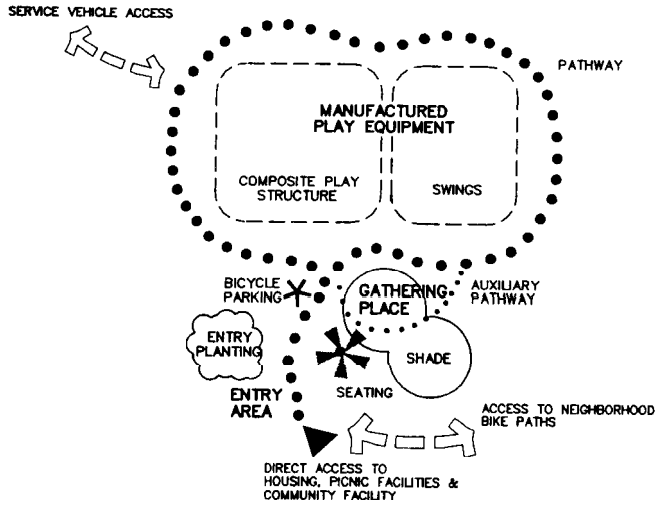

Figure 5–4. Play Lot (6 Weeks to 9 Years)

(3) *Gathering place.* A gathering place is provided near the entry area with views of the turf area.

(4) *Manufactured Play Equipment.* A composite structure and swings are located on the edge of the play area.

(5) *Pathways.* In addition to the primary pathway, an adventure bike path is provided around the perimeter of the play area to separate bike and pedestrian use.

(6) *Service Vehicle Access.* A service vehicle access route is provided through the play area for ease of maintenance.

b. Option 2. Option 2 emphasizes sports and games and includes two gathering places (fig 5–6).

(1) *Sports and Games.* The turf area is the central element of the park. The multi-use hard surface area is located at the edge of the park. A ball wall is provided at the edge to increase ball play opportunities and focus the ball play away from adjacent activities.

(2) *Gathering Place.* A seating area for children and adults is centrally located near the entry area to provide views of all the play components. In addition, a larger gathering area that includes picnic tables is located at the edge of the park. It is located near the ball play area to allow spectators to watch the action on the courts.

(3) Service *Vehicle Access.* A service vehicle access route is provided through the play area for ease of maintenance.

5-6. Community Park (O to 15 Years).

Two or more adjacency diagrams may be combined to create conceptual play area designs serving more than one age group at a community park (fig 5–7). Figure 5–7 also includes a prioritized list of play area components. These priorities are based on the developmental importance of components to that age group. The order of the list may be used to determine which components should be retained in a design when there are site or budget limitations. Although play area components may have similar labels for all age groups, the site design and design details vary according to the user's age group.

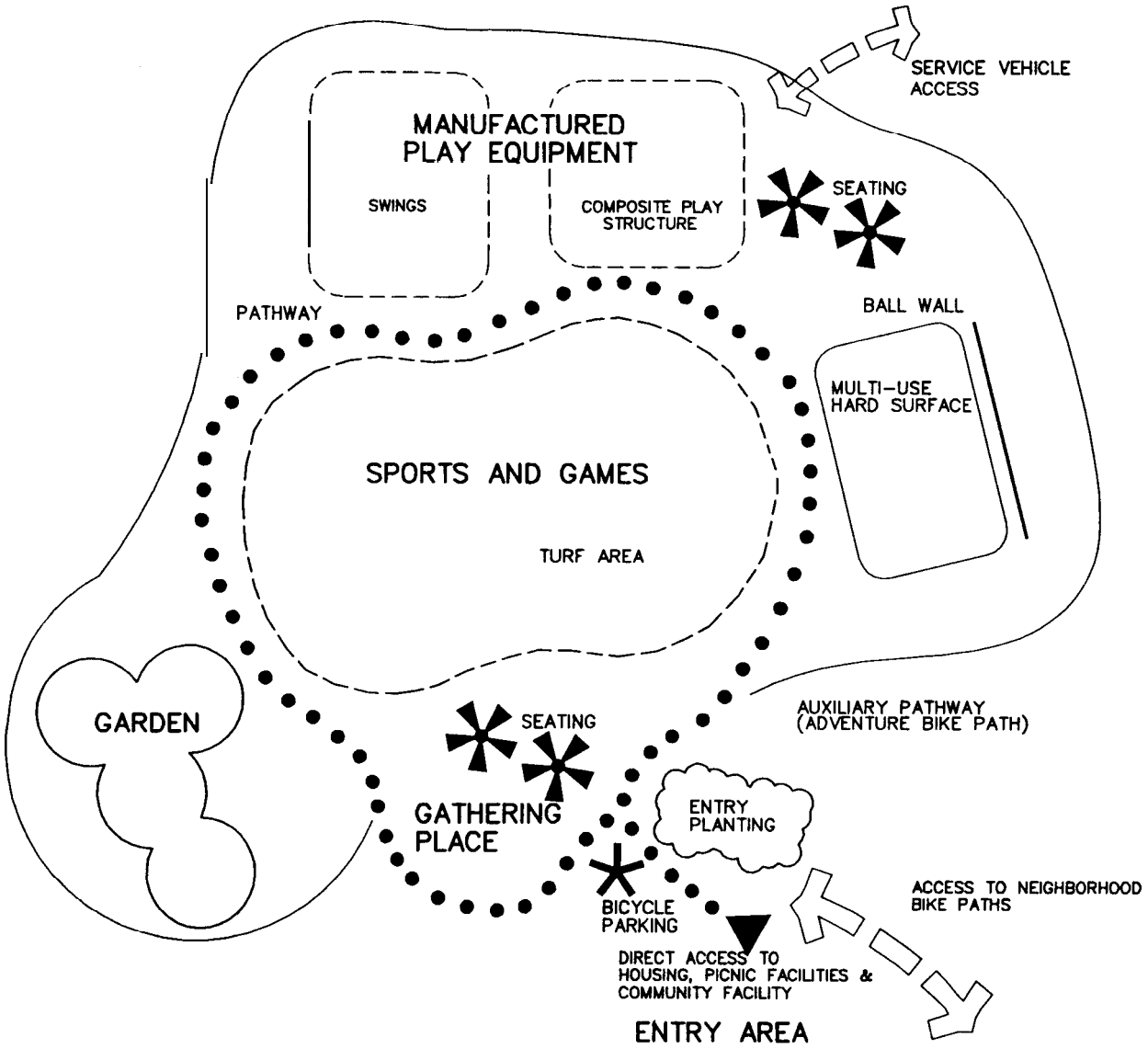

Figure 5–5. Neighborhood Park - Option 1 (9 to 15 Years).

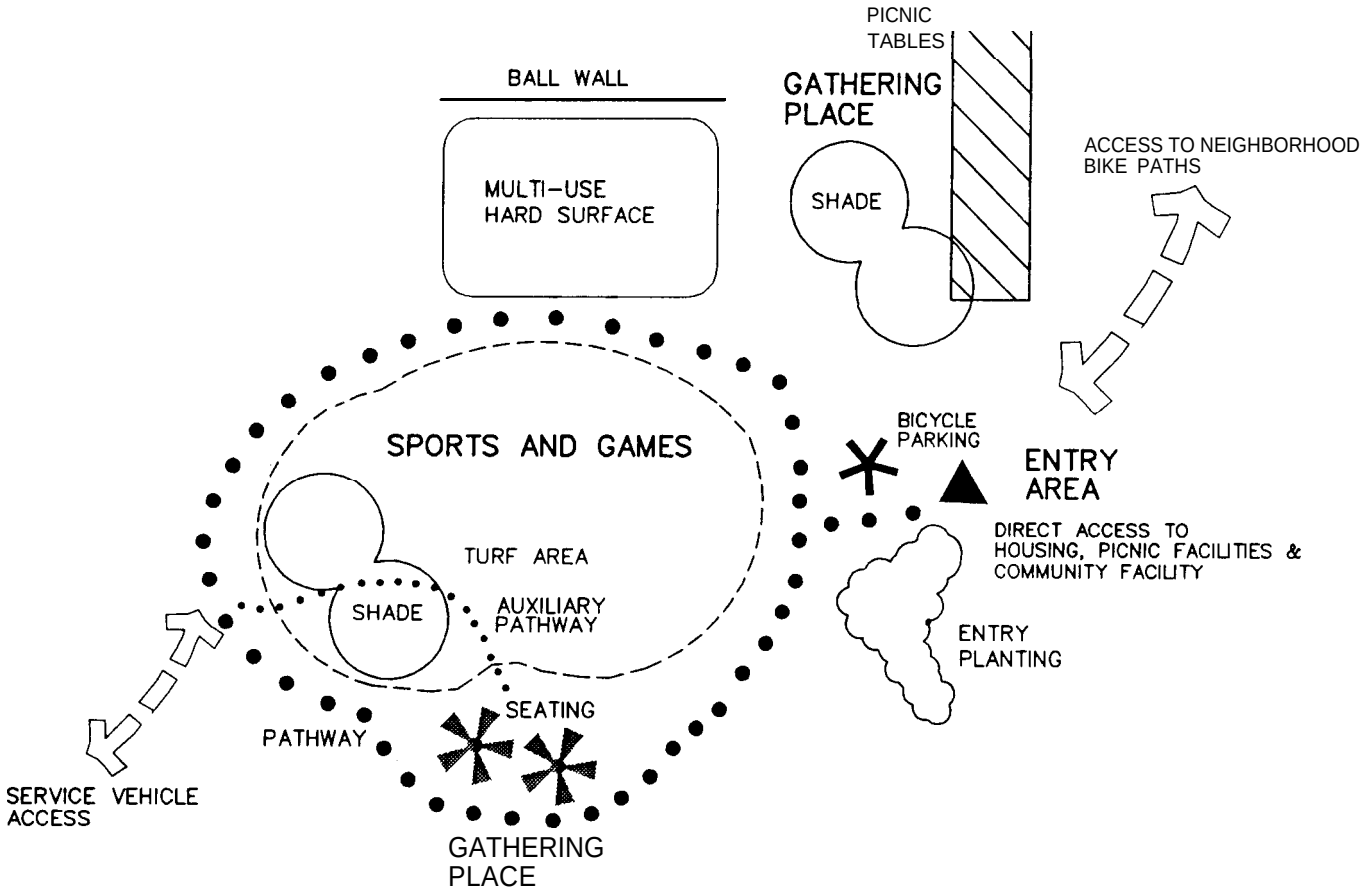

Figure 5–6. Neighborhood Park Option 2 (9 to 15 years).

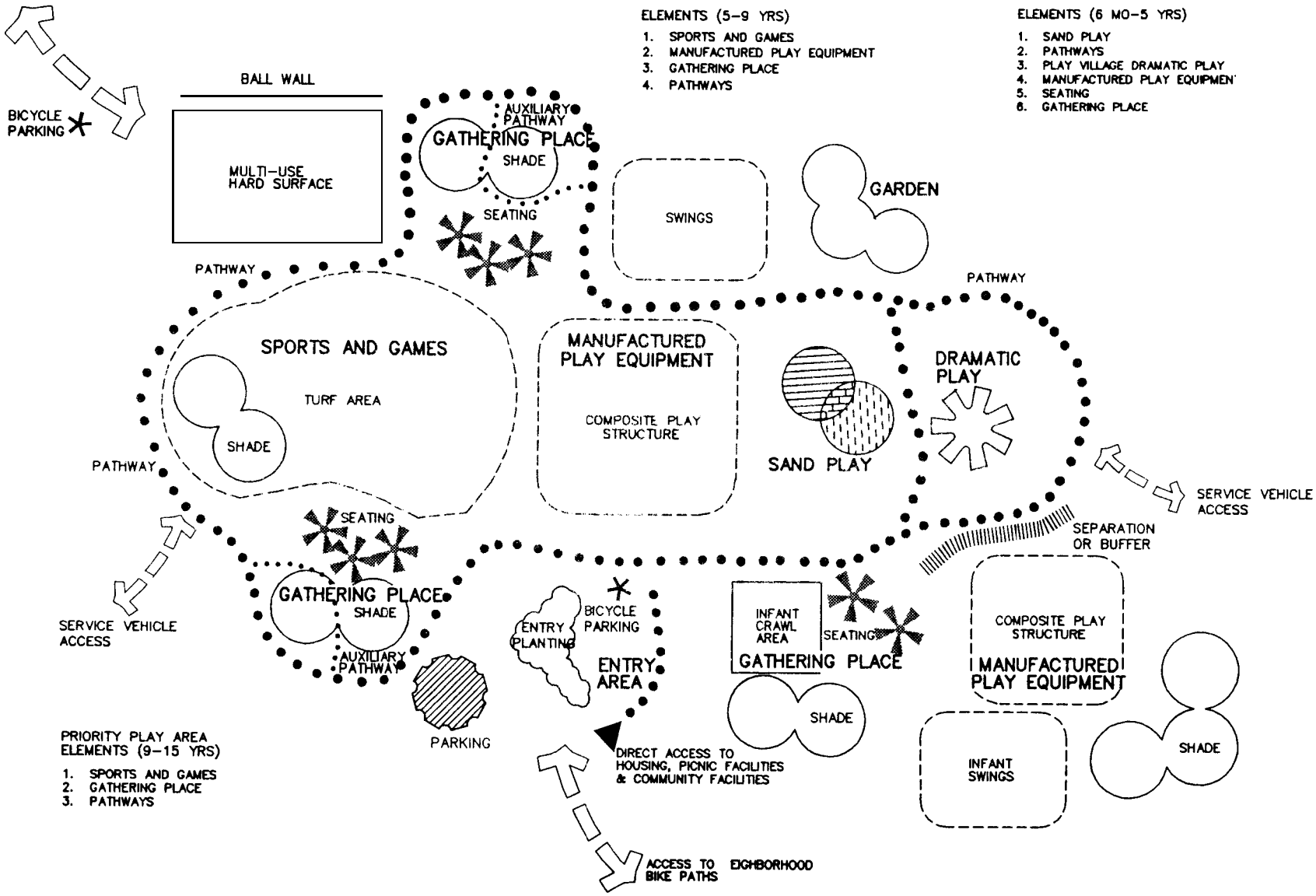

Figure 5-7 Community Park (0 to 15 Years).

CHAPTER 6

THE DESIGN DOCUMENTS

6-1. Introduction.

The conceptual (10%) design translates a selected adjacency diagram to the project site and communicates key design concepts to the play area committee. During conceptual design, design elements are selected for each play area component. Conceptual design provides opportunities to evaluate alternative design approaches and identify preliminary costs. Once the design is approved by the civil or installation engineer and the play area committee, final design documents will be created. If required, a phased development plan can also be created.

6-2. Site Adapt the Adjacency Diagram.

The designer will select an adjacency diagram from chapter 5 based on the age group served by the play area and the findings of the design criteria report. The selected diagram will be adapted to the site by comparing the information documented during site analysis to the selected adjacency diagram. Using the selected diagram, a site-adapted adjacency diagram will be created for play area components using simple bubble-type shapes. The bubbles should be drawn to the approximate scaled size requirements. These bubble-type shapes should be organized on the site plan in the locations suggested by the site analysis and the selected diagram. The important relationships between play area components should be maintained. The desired connections or separations between play activities should be indicated graphically. Locations where support facilities, screens, barriers, or enclosures may be needed should be indicated. Site constraints which need to be modified to permit use, such as regrading of steep slopes, should also be noted. The site-adapted adjacency diagram will be used to create the conceptual (10%) design.

a. Relatively Flat Sites. Often the site is flat, with few physical characteristics to limit or direct play area organization. For these sites, the site analysis may provide only limited direction. The optimum relationships presented in the adjacency diagrams may then be applied to the site with little or no adjustment needed to accommodate physical site characteristics.

b. Sites With Varied Topography. If extensive grading is necessary to accommodate a design, it may be prohibitively expensive to implement the adjacency diagrams as shown. When this occurs, the designer should reorganize the adjacency diagram to utilize existing landforms following the general guidelines presented in chapter 5.

c. Existing Vegetation. Mature trees, shrubs, and other desirable vegetation should be maintained whenever possible. If needed, the adjacency diagrams should be reorganized to utilize existing vegetation following the general guidelines presented in chapter 5.

d. Combining Adjacency Diagrams. When combining more than one adjacency diagram to create a play area serving multiple age groups, the play area relationships described in chapter 5 should be maintained. Low walls or other barriers should provide definition, separation, and safety between play area components as previously described.

e. *Alternative Site Adapted Adjacency Diagrams.* If desired, several alternative adjacency diagrams may be prepared. These may then be evaluated to determine the arrangement which most completely satisfies the program requirements, site opportunities, and site constraints.

6-3. Create a Conceptual Design and Cost Estimate.

The conceptual design is drawn to scale and shows exact sizes and locations of play area components (fig 6-l). While complete construction details are not normally included, sufficiently detailed drawings should be provided to clearly depict the design concept and to assist in cost estimating. The designer should ensure that the site layout meets the requirements of this manual and the design criteria report.

a. Conceptual Design. The conceptual design should include the following:

(1) *Play Area Components.* Play area components and major activity points, such as entrances and exits, sitting areas, and service vehicle access, should be indicated. The location of proposed support facilities, such as drinking fountains, drainage, and primary utility points of connection, should be shown.

(2) *Design Elements.* The design elements that comprise each play area component should be identified. These elements will be located on the conceptual design.

(3) *Use Zones.* Manufactured play equipment requires use zones covered with safety surfacing in accordance with chapter 11. All use zones will be shown.

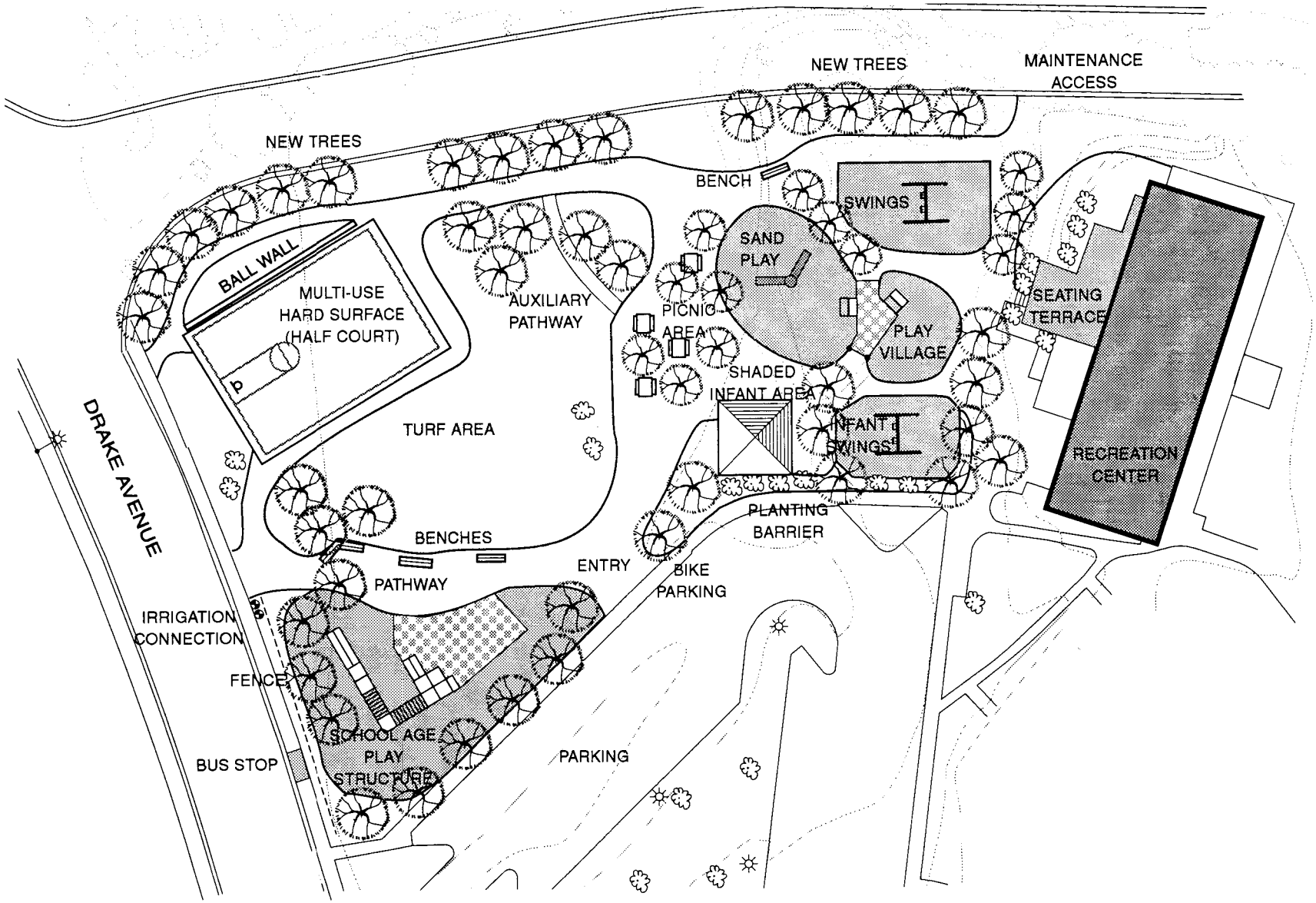

Figure 6-1 Conceptual Design

(4) *Ground Surface Materials.* Ground surface materials, such as turf, sand, and concrete, should be identified. Safety surfacing will be clearly labeled to distinguish it from other surface materials.

(5) *Plant Materials.* Locations for existing plant materials which will be retained and proposed plant materials should be shown. The intended functional use of these materials should be described. Poisonous plants should be identified for removal.

(6) *Existing Site Features.* Existing structures and other site features which are to be removed or retained should be noted. Any improvements needed for child safety should be described. If extensive demolition or regrading is required, a separate drawing should be added to address this work.

(7) *Topography.* Existing and proposed topography should be indicated. Spot elevations should be indicated at critical points such as paths, structures, existing trees, entrances to buildings, and major changes in grade.

(8) *Accessibility.* Accessibility for children and adults with disabilities will be provided in accordance to this manual.

b. Cost Estimates. Preliminary cost estimates for the conceptual design should be developed. Quantity takeoffs and, if necessary, product manufacturer quotations for important design elements should be included.

c. Alternative Design Concepts. Alternate ideas for specific play area components may be presented if desired.

d. Specifications. Outline specifications should be prepared.

e. *Product Cut Sheets.* If needed to illustrate the design concept, catalogue cut sheets depicting the primary products proposed may be included.

6-4. Coordinate with the Play Area Committee.

The play area committee and the engineering staff should review the conceptual design. This design review meeting may be open to interested community members for public comment. After the review, the designer will make recommended design changes or refinements.

6-5. Develop the Final Design Documents.

The designer will convert the conceptual design into final design documents in accordance with local policy and regulations.

6-6. Create a Phased Development Plan.

Ideally, funding will be available when the play area design begins. However, sometimes funding of play areas becomes available in small increments. If not properly planned, incremental development of play areas can create safety problems and inappropriate play area relationships. Preparation of the overall conceptual plan allows the project to be developed in orderly phases while maintaining child safety and functional requirements. Therefore, when initial funding is limited, the designer will work with the play area committee to prioritize the play area elements for phased development. The phased development plan for each design is unique. Depending on available funds, the first phase of development could include pathways, utilities, grading, and the most important play area components.

6-7. Coordinate with the Play Area Committee.

The engineering staff and play area committee will review the final design submittals at designated intervals during the design process. In addition, the installation safety manager will review the documents for compliance with child safety requirements. The number of reviews will vary depending on the size of the project.

CHAPTER 7

CHILD SAFETY REQUIREMENTS FOR OUTDOOR PLAY AREAS

7-1. Introduction.

The designer should be thoroughly familiar with safety requirements for children's outdoor play areas. The U.S. Consumer Product Safety Commission (CPSC) estimates that each year in the U.S. approximately 170,000 children are treated in hospital emergency rooms and 17 deaths occur from injuries sustained on public play areas. In addition to child safety, potential liability, sustained morale, and public relations are further reasons why military installations should provide safe play areas. This chapter describes general safety guidelines that will help prevent serious injuries.

7-2. Guidelines for Child Safety.

Children's outdoor play areas will meet the requirements of the CPSC *Handbook for Public Playground Safety* and the American Society for Testing and Materials (ASTM) *Standard Consumer Safety Performance Specification for Playground Equipment for Public Use* (ASTM F 1487). This chapter defines safety terms and provides additional guidance for instances where no guideline has been provided or new research has become available. For a complete review of safety requirements, CPSC and ASTM F 1487 should be consulted along with this manual. If a conflict exists between this manual, CPSC, or ASTM F 1487, the more stringent requirement will be applied.

7-3. Material Selection.

Building materials will be selected that have demonstrated durability in play areas or outdoor settings. For purchased items, holes in materials should be factory-drilled. Extra holes that will not be filled in by hardware and could harbor insects should not be present.

a. Plastic. High density polyethylene is a material commonly used for manufactured play equipment. It is especially appropriate for slides, because plastic surfaces are less likely than metal to cause burns in hot climates. Plastic coatings, such as polyvinyl chloride (PVC), may also be used on metals that would otherwise become too hot in direct sunlight. Plastic materials should be ultraviolet (UV) stabilized to minimize fading, resistant to cracking, and shatterproof. Fiberglass should be avoided because it has low impact tolerance.

b. Metal. Metal requires less maintenance than wood materials and is more durable. Rust-free metal materials, such as stainless steel and aluminum, should be selected. Metals subject to rust or corrosion should be painted, galvanized, or otherwise treated. All metal edges should be rolled or have rounded capping. Hollow metal tubes should be capped to eliminate standing water and sharp edges. To avoid the risk of contact burn injury, bare or painted metal surfaces will be avoided in regions where intense sunlight and heat can be expected, unless the surfaces are located out of direct sunlight.

c. Wood. Wood materials require regular maintenance to control splintering, weathering, and deterioration. Wood that is naturally rot- and insect-resistant or treated to avoid rapid deterioration should be selected. Cedar, cypress, and redwood are naturally resistant to decay, checking, and cupping. Regional species should be selected to reduce costs of site-built elements, such as benches and planters. Wood should be premium grade and free of sap wood and loose knots.

d. Wood Preservatives and Paints. Wood preservatives and paints used in children's outdoor play areas will meet ASTM F 1487 standards. Play area users should not be able to ingest, inhale, or absorb hazardous amounts of substances as a result of contact with preservatives and paints. Wood that is not naturally rot- and insect-resistant will be treated below the level of the play area surface and up to 150 mm (6 inches) above the play area surface.

(1) *Inorganic Arsenical.* The most common wood treatment used in play areas are the inorganic arsenical. These will be applied by the manufacturer or wood preserver according to the specifications of the American Wood Preservers Association C 17 standard. This standard states that treated wood will be visibly free of residues that may contain high levels of arsenic. Chromated copper arsenate, which causes a greenish coloration, is acceptable if the amount of arsenic on the surface of the wood that can be dislodged is minimized. Treated wood that complies with these standards may be suitable for use in children's play areas. However, arsenical-treated wood will not be used in the construction of drinking fountains or other locations where it would contact public drinking water directly or indirectly.

(2) *Other Acceptable Wood Preservatives.* According to CPSC, wood treated with other preservatives that have low toxicity may be suitable for use

in children's play areas. These include copper or zinc naphthenates and berates.

(3) *[Unacceptable Wood Preservatives.* Several wood preservatives are too toxic or irritating to be used in children's play areas. These include creosote, pentachlorophenol, and tributyl tin oxide. Finishes that contain pesticides will be avoided.

(4) Paints. All paints or similar finishes used in play areas will comply with the ASTM F 1487 standard to minimize lead exposure.

e. Fasteners and Connecting Devices. All fasteners and connecting and covering devices will be corrosion-resistant, such as stainless steel, brass, zinc plated metal, zinc-chromate plated metal, or galvanized steel.

(1) *Unintentional Loosening.* All fasteners, connecting and covering devices, and hardware in moving joints will not loosen or be removable without tools when installed according to manufacturer's instructions. All nuts and bolts will be protected from detachment with lock washers, self-locking nuts, or other locking means.

(2) *Friction or Wear* All moving parts, such as swing chains, will be connected to the fixed support with bearings or bearing surfaces that reduce friction or wear. A steel cable permanently connected to a hanger assembly is acceptable.

(3) *Entanglement.* Entanglement occurs when a child's clothing or items worn around a child's neck become caught or entwined on play equipment or site furnishings. Strangulation, loss of a body part, or emotional injury may result. Fastening devices, such as S-hooks, pelican hooks, C-hooks, or clevis devices, will be closed as specified by ASTM F 1487 to prevent possible entanglement.

f. Chain, Cable and Rope. Verification should be obtained from manufacturers that chain and cable meet structural integrity requirements specified by ASTM F 1487. Chain should be a minimum size 4/0 and zinc plated. Cable should be a minimum 25 mm (1 inch) diameter and be composed of strands of steel cable with a synthetic covering of polypropylene or dacron. Rope will not be used in unsupervised children's outdoor play areas. Cable and chains that are not properly designed can cause strangulation or injuries. To avoid these hazards, all chains and cables will meet ASTM F 1487 requirements.

g. New Construction Materials. New materials are constantly being developed for manufacturing use. Recent examples include the increased use of plastics and recycled materials. If any materials used in construction do not have demonstrated durability in play areas or the outdoors, documentation or test results will be obtained from manufacturers to verify durability.

7-4. Head and Neck Entrapment.

All elements within the play area will be designed, constructed, and assembled to reduce the risk of accidental head or neck entrapment when children enter any opening headfirst or feetfirst. Entrapment occurs when a child's head or neck becomes lodged within a space and cannot be withdrawn. Strangulation or emotional injury can result. Both the opening size and shape are considered in determining entrapment potential. Any opening that is closed on all sides and all angular openings will meet the entrapment criteria specified in ASTM F 1487. This ASTM standard includes testing criteria that can be used to evaluate opening size and shape for entrapment potential.

7-5. Maximum Recommended Equipment Heights by Age Group.

Play equipment should be selected that allows safe and successful use by children of a specific chronological age, mental age, and physical ability. Play equipment height and complexity should not exceed the user's ability as defined by tables 7–1 and 7–2. These tables are based on the average user in each age group. An individual child's skills may vary from these averages and must be assessed by parents and guardians.

7-6. Multiple Exits.

A minimum of two exits should be provided on all play equipment, including composite structures and playhouses. Climbers, such as rung ladders, climbing nets, and arch climbers, should not be used as the sole means of access to equipment intended for children under age five. A playhouse window may qualify as an exit if it is a minimum of 400 mm (16 inches) in diameter.

7-7. Pinch, Crush, and Shear Points.

Pinch, crush, or shear points are junctures that could cause contusion, laceration, abrasion, amputation, or fracture during use. A pinch, crush, or shear point is defined by ASTM F 1487 as any point that entraps a 16 mm (5/8-inch) diameter rod at one

Table 7-1. Recommended Composite Structure Platform Heights.

Age Group	Maximum Platform Height	
	Millimeters	Inches
12-24 months	900	36
2-5 years	1200	48
5-12 years	1400	56

Table 7-2. Maximum Recommended Play Equipment Heights.

Play Events	6 weeks-12 mos.	12-24 mos.	2-5 years	5-12 years
Balance beam (maximum height)	N/A	N/A	300 mm (12 inches)	400 mm (16 inches)
Banister slide (maximum height of attached platform)	N/A	N/A	N/A	1400 mm (56 inches)
Chinning/turning bars (maximum height)	N/A	N/A	1500 mm (60 inches)	2100 mm (84 inches)
Clatter bridge (height to bridge surface)	N/A	N/A	760 mm[b] (30 inches)	1200 mm (48 inches)
Climber - freestanding (maximum height)	N/A	N/A	1500 mm[c] (60 inches)	1500 mm (60 inches)
Climber - attached to composite (maximum height)	N/A	N/A	1200 mm[c] (48 inches)	1400 mm (56 inches)
Climber - arch (maximum height, attached to composite structure)	N/A	N/A	1200 mm[c] (48 inches)	1400 mm (56 inches)
Climber - arch - freestanding	N/A	N/A	N/A	1500 mm (60 inches)
Climber - net - installed at 90° (maximum height)	N/A	N/A	2400 mm (96 inches)	2400 mm (96 inches)
Climber - net- installed at 60° (maximum height)	N/A	N/A	N/A	1400 mm (56 inches)
Fire pole (maximum height of attached platform)	N/A	N/A	N/A	1400 mm (56 inches)
Horizontal ladder (maximum height)	N/A	N/A	1500 mm[c] (60 inches)	2100 mm (84 inches)
Parallel bars (maximum height)	N/A	N/A	N/A	900 mm (36 inches)
Playhouse - freestanding (maximum height at roof ridge)	1800 mm (72 inches)	1800 mm (72 inches)	1800 mm (72 inches)	1800 mm (72 inches)
Ring trek (maximum height - rings to safety surface)	N/A	N/A	N/A	2100 mm (84 inches)
Slide (maximum height at entrance)	N/A	900 mm[a] (36 inches)	1200 mm (48 inches)	1400 mm (56 inches)
Spring rocking equipment (maximum seat height)	N/A	N/A	700 mm (28 inches)	N/A
Stationary bridge (maximum height to bridge surface)	No potential fall	900 mm (36 inches)	1200 mm (48 inches)	1400 mm (56 inches)

[a]Recommended for ages 2 and older.
[b]Recommended for ages 3 and older.
[c]Recommended for ages 4 and older.

Table 7-2. Maximum Recommended Play Equipment Heights--Continued

Play Events	6 weeks-12 mos.	12-24 mos.	2-5 years	5-12 years
Swings - to-fro (maximum crossbeam height)	2100 mm (84 inches)	2100 mm (84 inches)	2400 mm[b] (96 inches)	2400 mm (96 inches)
Swings - rotating (maximum crossbeam height)	N/A	N/A	2400 mm[b] (96 inches)	2400 mm (96 inches)
Track ride (maximum height - hand hold to safety surface)	N/A	N/A	N/A	2100 mm (84 inches)
Tunnel (maximum height of attached deck)	Ground level No potential fall	900 mm (36 inches)	1200 mm (48 inches)	1400 mm (56 inches)

[a]Recommended for ages 2 and older.
[b]Recommended for ages 3 and older.
[c]Recommended for ages 4 and older.

or more positions. Accessible crush, pinch, or shearing points will not be provided in outdoor play areas. To reduce the likelihood of unintentional contact with a pinch, crush, or shear point, openings will meet the specifications of ASTM F 1487. Chain and the hardware that attaches it to equipment are exempt from pinch, crush, and shear point requirements. The attachment area of heavy duty coil springs to the body and base of rocking equipment is also exempt.

7-8. Protective Barriers.

Protective barriers are enclosures that help keep children from falling off elevated platforms. A protective barrier is a vertical surface, game panel, series of vertical or diagonal bars spaced less than 90 mm (3-112 inches) apart, or other design free of footholds or handholds that may facilitate climbing. For children ages 5 through 12 years, any play equipment platform over 750 mm (30 inches) in height above the playing surface will be surrounded with a protective barrier a minimum 970 mm (38 inches) high. For children under 5 years, any play equipment platform over 500 mm (20 inches) in height above the playing surface will be surrounded with a protective barrier. A protective barrier a minimum 740 mm (29 inches) high will be provided for children ages 2 to 5 years. For children under 2 years, a protective barrier a minimum high 500 mm (20 inches) will be provided. ASTM F 1487 also allows the use of a guardrail for some platform heights and age groups. However, guardrails provide less protection. Therefore, the use of guardrails will be avoided, except when necessary for play equipment function, e.g., on moving bridges. Protective barrier requirements are illustrated in figure 7–1.

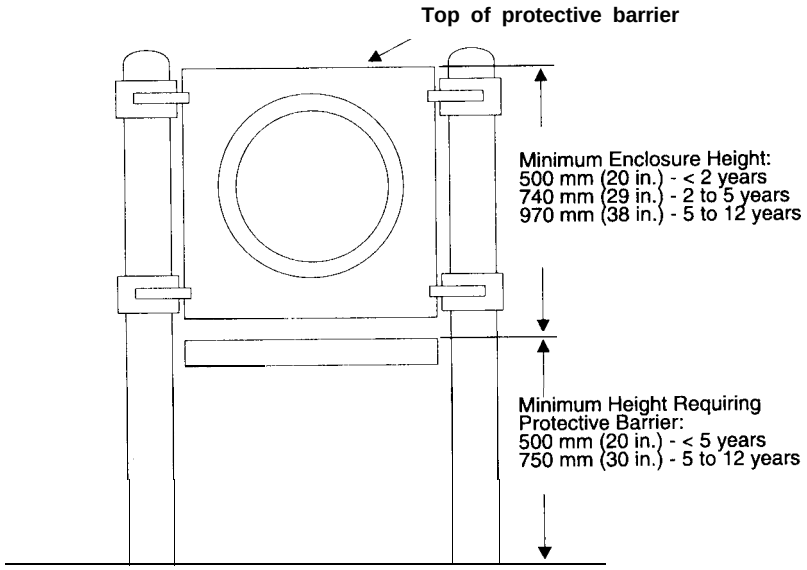

Figure 7-1. Protective Barrier Requirements,

7-9. Protrusions.

Protrusions are hardware, pipes, posts, or other structural members that extend in any direction from play equipment, site elements, or site furnishings. Protrusions may catch a child's clothing causing strangulation or loss of balance. Protrusions may also pose a potential impact hazard. Hardware that increases in diameter from the surface to the exposed end and caps or coverings that do not fit flush against the nut or surrounding surface are two examples of protrusions that are likely to catch a child's clothing. All protrusions will meet the requirements of ASTM F 1487.

7-10. Sharp Points and Edges.

A sharp point or edge is one that can puncture or cut a user's skin. Accessible sharp points or edges will not be provided in the outdoor play area. Manufacturers will provide verification that all points and edges meet ASTM F 1487 standards.

7-11. Use Zones.

A use zone is the clear area under and around play equipment where a child could land when falling, jumping, or exiting from the equipment. For all play equipment, an unobstructed use zone covered with safety surfacing will be provided, which at minimum conforms to ASTM F 1292 for the highest accessible equipment fall height (chap 11). This criteria reduces the likelihood of life-threatening head injuries that often result from falls from play equipment. Use zones should not overlap except where indicated. Figure 7–2 provides an example of adjacent play equipment without overlapping use zones. The use zone dimensions depend on the equipment type and users' age group. Use zone requirements for each type of play equipment are provided in chapter 10.

a. Typical Use Zone. Figure 7–3 illustrates a typical manufactured play equipment use zone. For infant to 2 years, provide a minimum 1800 mm (72-inch) use zone from all sides of the equipment. For ages 2 through 12 years, provide a minimum 2400 mm (96-inch) use zone from all sides of the equipment. Some equipment, such as to-fro swings and tire swings, have greater requirements.

b. Typical Overlapping Use Zone. An overlapping use zone may be provided for some equipment, such as two playhouses which are not designed for climbing, two balance beams under 500 mm (20 inches) high, and two spring rockers with a seat height of 750 mm (30 inches) or less. Figure 7–4 illustrates a typical overlapping use zone.

c. High Use Play Areas. Sufficient space should be provided between all adjacent structures and individual play equipment for play and circulation.

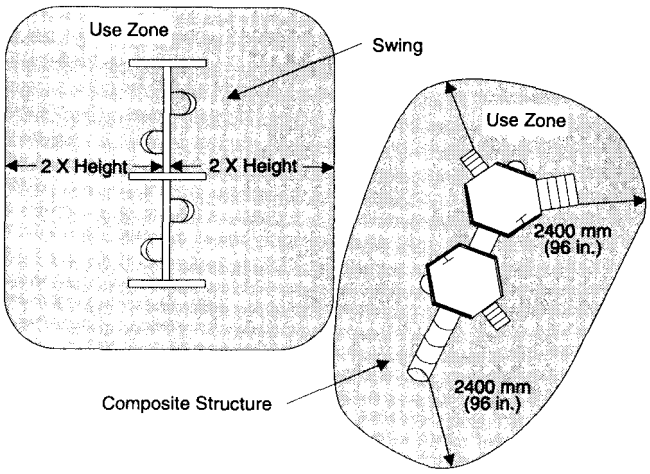

Figure 7–2. Adjacent Play Equipment without Overlapping Use Zones.

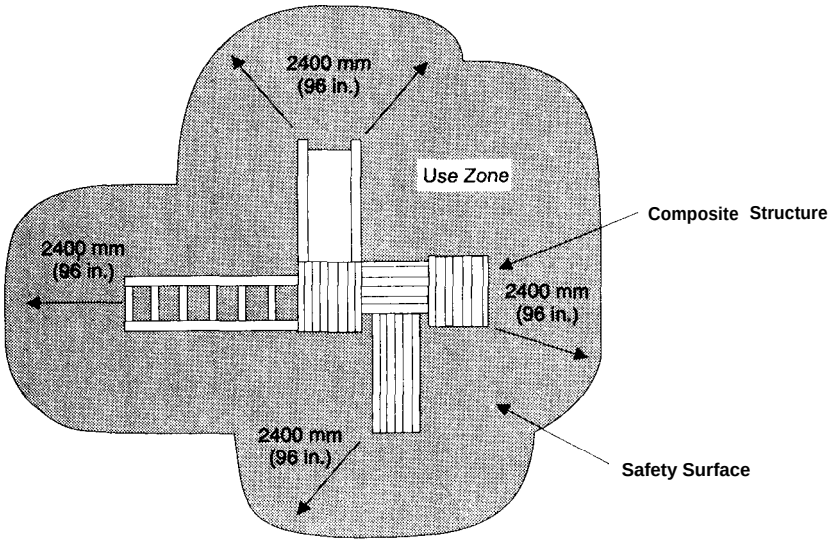

Figure 7-3. Typical Use Zone.

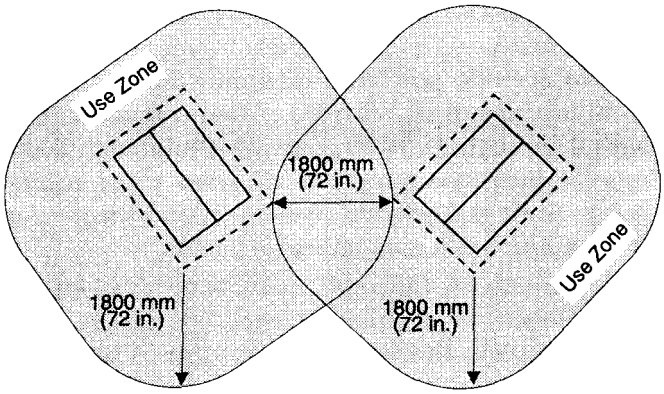

Figure 7-4. Typical Overlapping Use Zone.

In settings where periodic overcrowding is likely, a supplemental circulation area beyond the use zone is recommended.

7-12. Utilities.

Play area utilities will support child safety and not expose children to hazards.

a. Water Only cold, potable water will be provided.

b. Electricity. Provisions for utility metering, transformers, and other electrical equipment will be located in locked vaults or utility rooms away from children's play areas.

c. Storm and Sanitary Sewers. Drainage grates will be locked. Grate shape or fastening device will prevent incorrect placement of grates by maintenance staff.

d. Utility Boxes. Utility boxes will be locked and located outside of the play area. The boxes will never be located within play equipment use zones.

e. Telphones. Telephones for emergency communication are recommended in neighborhood and community parks.

f. Power Circuits. Ground fault circuit interrupters (GFCI) should be provided for all outdoor power circuits.

CHAPTER 8

ACCESSIBILITY

8-1. Introduction.

This chapter describes general criteria for designing play areas that are accessible to children and adults with disabilities. It presents guidelines and standards that apply to the design of children's outdoor play areas. In addition, information to assist designers in creating an accessible design program and guidance for creating accessible play area components is provided.

8-2. Accessibility Criteria.

Federal guidelines describe accessibility standards for adults, but are not always appropriate in children's play areas. Criteria and policies for accessible play areas follow:

a. *Accessibility Standards for Adults.* Play areas will comply with the Uniform Federal Accessibility Standards (UFAS) (Federal Standard 795). In cases where the Americans With Disabilities Act Accessibility Guidelines (ADAAG, 36 CFR 1191) provides equal or greater accessibility than UFAS, the ADAAG will be met.

b. Accessibility Guidelines for Children. UFAS and ADAAG requirements are based on adult-sized dimensions. When these dimensions are appropriate for children's outdoor play areas, accessibility standards for adults are referenced in this manual. In many cases, however, design criteria based on child-sized dimensions should be used for the proper functioning of the play area. These dimensions are provided where needed.

c. Policy on Play Area Access for Children and Adults with Disabilities. Play is a primary means through which children learn and develop. Both child development and the integration of children with and without disabilities are best supported by a diverse, challenging play area. Every part of the play area may not be accessible to all of its users, but the social experience provided should be accessible to everyone.

(1) *Provide Like or Similar Experiences.* When more than one play activity of the same type is provided in close proximity, one will be accessible. If one activity of its kind is provided, it will be accessible. For example, if two spring rocking animals are provided in the same part of the play area, one should be accessible. If only one spring animal is provided, it should be accessible.

(2) *Provide an Accessible Path of Travel. An* accessible path of travel is a pathway that is firm, stable, and slip-resistant. It allows for ease of use by persons using a wheelchair, walker, cane, or crutches. An accessible route of travel connecting all accessible activities within the play area will be provided.

(3) *Promote Interaction Among Users.* To encourage social interaction between users with varying abilities, less challenging play activities will be provided in the same area as the most challenging equipment or components.

8-3. Disability Types.

Play area diversity increases play options for all children, including those with disabilities. Descriptions of general types of disabilities that should be considered when designing children's outdoor play areas follow:

a. Physical Disability With Upper Body Strength. Some individuals with physical disabilities have limited mobility, but have upper body strength that may allow transferring onto play equipment, using a horizontal ladder, or playing a manipulative game. Examples include a paraplegic who uses a wheelchair for mobility or an individual who walks with a cane or crutches.

b. Physical Disability Without Upper Body Strength. Some individuals with physical disabilities have limited use of their hands and arms. Use of both the upper and lower body maybe affected, as is the case with a quadriplegic or a person severely affected by cerebral palsy. Other individuals may have use of the legs but have limited arm use, such as a person whose limbs were amputated.

c. Visual Disability. Individuals with limited vision include people with a wide range of visual limitations. Some people with limited vision can read large print, and others cannot distinguish light from darkness. Few individuals totally lack all vision.

d. Auditory Disability. People with auditory disabilities are unable to respond normally to sound in most social situations. Abilities range from mild hearing loss to profound deafness.

e. Developmental Disability. For people described as developmentally disabled, learning ability develops more slowly than average. Reasoning and judgment capabilities may also develop at a slower pace. For most people with developmental disabilities, it is not the ability to learn that is lacking, but the speed and ease with which things are learned that is impeded. The range of capabilities in people with

developmental disabilities is greater than in any other disability group. People with developmental disabilities may also have difficulty with coordination, balance, agility, strength, body awareness, and self-image.

8-4. Play Area Components.

With proper design, most play area components can be accessible to children and adults with disabilities.

a. Entry Areas. All main entrances will be fully accessible. The overhead clearance at the entrance will meet accessibility standards for adults. The width of the entrance will be 1200 mm (48 inches) at minimum. The main entrance will be linked by accessible pathways to public transportation stops, when provided, passenger loading zones, accessible parking spaces, and to public streets and sidewalks. A person with a disability will be able to travel independently from this entrance to all accessible spaces within the play area.

b. Pathways.

(1) *Accessible Routes of Travel. An* accessible route is a continuous unobstructed route, such as a primary pathway or fully accessible surfacing, which is accessible to persons with disabilities. At minimum, the accessible route will extend from the play area perimeter to each type of activity within the play area.

(2) *Accessible Routes Within the Play Equipment Use Zone.* At least one accessible route will be provided within the use zone. The accessible route will extend from the play area perimeter to each type of play equipment that provides a different activity or function.

(3) *Surfacing of Accessible Routes.* The surface of the accessible route should be firm, stable, and slip-resistant. Examples of appropriate surfacing include: concrete, asphalt, and synthetic safety surfaces. Accessible safety surfacing within the play equipment use zone will meet the requirements of ASTM F 1292, except where a ramp, deck, or stationary bridge connects to a pathway at the edge of a use zone.

(4) *Minimum Width of Accessible Routes.* The minimum width of accessible routes will be 1500 mm (60 inches).

(5) *Maximum Slope of Accessible Routes.* The cross slope and running slope of accessible routes will meet accessibility standards for adults.

(6) *Edge of Accessible Routes.* If the accessible route is adjacent to loose-fill material or if there is a difference in height between two adjacent surfaces, the edge of the route will be treated to prevent a wheelchair from traveling off of the route or from tipping into loose-fill material. If the route is within the use zone of play equipment, the path and edge treatment will meet the requirements of ASTM F 1292.

(7) *Accessible Routes with Slopes Greater than 1:20. Any* accessible route with a slope greater than 1:20 is a ramp. Ramps will meet accessibility standards for adults.

(8) *Seating and Rest Areas.* Along all primary pathways, a 1500 mm by 1500 mm (60-inch by 60-inch) level space should be provided every 60 to 120 m (200 to 400 feet). Seating should be provided every 0.25 km (1/8 mile).

(9) *Auxiliary Pathways.* Auxiliary or secondary pathways will have a minimum width of 900 mm (36 inches). If the pathway is longer than 6 m (20 feet), a turnaround area will be provided every 6 m (20 feet). For play purposes, an auxiliary path may be textured or bumpy for a maximum length of 1500 mm (60 inches).

(10) *Drainage Grates.* Grate openings will have a maximum width of 12 mm (l/2-inch). The longest dimension of grate openings will be perpendicular to the accessible path of travel.

(11) *Wheeled Toys.* Wheeled toys are an important method of independent mobility for children with disabilities and should be allowed on play area pathways.

(12) *Changes in Texture.* Changes in texture and material should be provided as nonvisual and tactile warnings for hazards and dangerous locations, such as crosswalks, stairs, water areas, etc. Textures used as a warning or cue for people with visual disabilities will be consistent throughout a site.

c. Sports and Games. Fully accessible viewing areas will be provided for spectators, parents, and children. Firm sports and games surfaces will be provided for wheelchair use. Accessible drinking fountains will be provided.

d. Dramatic Play. Playhouses should have an interior space large enough to allow wheelchair access. An entrance will be provided that at minimum meets accessibility standards for adults. Windows will be provided at a height that allows viewing from a wheelchair. Performance platforms should be located at ground level. If a ramp is present, a turning space will be provided for children in wheelchairs that at minimum meets accessibility standards for adults.

e. Sand Play. If provided, both ground-level and raised sand play components will be accessible.

(1) *Back Supports.* For ground-level sand play, a firm, stationary back support will be provided for leaning or resting. Back supports will be provided in close proximity to the most active part of the sand play area to promote social interaction. Back sup-

ports may include any vertical surface with a minimum height of 300 mm (12 inches) and a minimum width of 150 to 375 mm (6 to 15 inches). Boulders, logs, and posts may be used as back supports.

(2) *Transfer Points.* For children 2 to 5 years, a transfer point will be provided at a height of 275 to 350 mm (11 to 14 inches) to allow children to transfer from wheelchairs onto ground-level sand play surfaces (fig 8–l). For children ages 5 to 8 years, a transfer point will be provided at a height of 350 to 400 mm (14 to 17 inches).

(3) *Raised Sand Area.* Raised sand areas at wheelchair height are highly accessible and can be attractive to all children. However, raised areas are not a substitute for ground-level sand play. The shallow depth of sand provided in raised sand components limits play opportunities. Accessible manufactured sand tables are one alternative for providing raised sand play opportunities.

(4) Faucets. Faucets will be provided that meet accessibility standards for adults.

f. Gardens.

(1) *Raised Beds.* Raised beds will be provided for children who use wheelchairs or cannot easily stoop. Locate the raised bed within the main garden area at a height of 500 to 750 mm (20 to 30 inches) above the garden surface. A minimum of 10% of the gardening surface should be raised.

(2) *U-shaped Beds.* Raised beds that are U-shaped allow easy reach from a central location. Access should be provided from either side or by forward reach at a height of 500 to 900 mm (20 to 36 inches) above the ground.

(3) *Ground-Level Gardens.* A transfer point will be provided to enable a child to transfer into the garden. For children ages 2 to 5 years, the height of the transfer point will be 275 to 350 mm (11 to 14 inches). For children ages 5 to 12 years, a transfer point at a height of 350 to 400 mm (14 to 17 inches) will be provided.

(4) *Garden Pathways.* A minimum 1100 mm (44-inch) width accessible pathway that leads to raised areas in the garden will be provided.

(5) *Water* Easy access to water, including an accessible path of travel, lever knobs on faucets, and coilable hoses, should be provided.

g. Gathering Places.

(1) *Pathways. An* accessible pathway will be provided to all gathering places.

(2) *Seating.* Seating along primary pathways will be accessible. Along auxiliary pathways, 50% of seating will be accessible. Bench design will meet accessibility standards for adults. For manufactured benches, backrests and arm supports that meet ASTM F 1487 requirements for entrapment will be provided. Informal seating, such as boulders and logs, do not require backrests and arm supports.

(3) *Picnic and Game Tables.* Picnic and game tables will be located on an accessible surface with an accessible path of travel leading to the picnic area. Every installed, fixed picnic table will be accessible. When fewer than five game tables are installed, one will be accessible. When five or more game tables are installed, a minimum of one or 10% will have two accessible seat spaces. A minimum of two or 1O% will have one accessible seat space. Each table will have at least one side that is not blocked by a fixed seat or bench. Wheelchair clearance will be provided for this open space.

(a) Wheelchair Clearance for Adults and Teens. For adults and teens, a clear space 675 mm (27 inches) high, 600 mm (24 inches) deep, and 750 mm (30 inches) wide will be provided.

(b) Wheelchair Clearance for Children Under 12 Years. For accessible picnic tables for children under 12 years, a clear space 675 mm (27 inches) high, 300 mm (12 inches) deep, and 915 mm (36 inches) wide will be provided. The tops of these tables will be a maximum of 750 mm (30 inches) from the floor or ground.

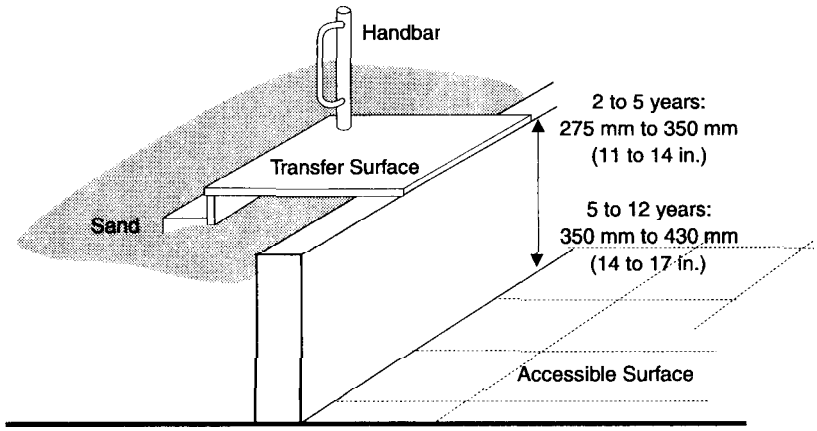

Figure 8–1. Transfer Point to Sand Surface.

(4) *Trash Receptacles.* Trash containers with easy-to-use openings will be provided in play areas. Trash containers will be located on accessible paths of travel. Trash container openings will be located no higher than 900 mm (36 inches) above the ground surface. Trash container lids will be provided that are operable without twisting or tight grasping. Spring-loaded mechanisms should not require more than 22 N (5 pounds) of operating force.

(5) *Planters.* Raised planters will be situated at a height of 500 to 750 mm (20 to 30 inches) above the ground surface to allow access to plant material.

h. Manufactured Play Equipment. Play equipment components will be accessible to children with disabilities. Accessible paths of travel, accessible safety surfaces, and transfer points or ramps onto equipment provide access for children with limited mobility. Manufactured play equipment is composed of one or more play events or activities, such as swings, climbers, and slides. Table 8-1 identifies recommended play events that may be accessible to children with physical, visual, auditory, or developmental disabilities. Design guidelines for manufactured play equipment are provided in chapter 10.

i. Plant Materials. Plant materials can be highly accessible. Important design considerations include providing access to plant materials through accessible pathways or raised planting, and selecting plant materials that provide sensory variety.

j. Landforms. Landforms can provide unique access opportunities for people with disabilities.

(1) *Accessible Hills and Mounds.* Slopes will conform to the requirements of accessible ramps. Ramps, handrails, guardrails, and level turning spaces may be required on pathways or at viewpoints.

(2) *Summit Points.* A level wheelchair turning space a minimum diameter of 1500 mm (60 inches) will be provided to accommodate wheelchair users at the "summit" points of hills and mounds.

(3) *Seating.* Seating along pathways or at summit points provides comfortable resting areas for children with limited stamina. Seating will not obstruct the minimum clear pathway width of 900 mm (36 inches).

k. Separation and Barriers.

(1) *Gates.* Pedestrian gates at entries and exits will have a minimum width of 1200 mm (48 inches). The gate opening force will not exceed 13 N (3 pounds) for play areas intended for children age 5 or less, and 22 N (5 pounds) for play areas intended for children older than 5 years.

(2) *Gate Hardware.* Hardware will be mounted on gates to meet accessibility standards for adults. When it is appropriate for children to open a gate, hardware will be mounted at heights for adults and at a height of 750 to 850 mm (30 to 34 inches) for children.

l. Signage. Signs will meet accessibility standards for adults. In addition, the following guidelines apply:

(1) *Height.* Signage height will meet accessibility standards for adults. If signs are intended for use by children, the appropriate mounting height is 1200 mm (48 inches) or lower, depending on the age of the primary user group. The height or heights that are most appropriate for users should be determined. Signs should be mounted at a consistent height throughout the site.

(2) *Location.* Signs should be visible and accessible from pathways and within reach for touch reading. Directional indicators will be clear.

(3) *Informative Signs.* Informative signs placed at the entry to a site should identify and locate accessible routes and facilities. Tactile maps can fulfill this purpose and can also be read by touch by people with limited vision.

m. Parking. Parking will meet accessibility standards for adults.

8-5. Noncompliance.

If a project can not be made accessible, in compliance with the guidelines presented in this manual, the designer will document the specific reason why the facility was not made accessible. This documentation will be maintained in the permanent project files.

Table 8–1. Play Events and Accessibility.

Play Event	Type of Disability				
	Physical[1]	Physical[2]	Visual	Auditory	Developmental
Balance beam	✘		✘	✘	✘
Banister slide	✘		✘	✘	✘
Chinning/turning bar	✘		✘	✘	✘
Clatter bridge	✘	✘	✘	✘	✘
Climber	✘		✘	✘	✘
Climber - arch	✘		✘	✘	✘
Climber - net	X		✘	✘	✘
Fire pole			✘	✘	✘
Game panel	✘	✘	✘	✘	✘
Horizontal ladder	✘		✘	✘	✘
Parallel bars	✘		✘	✘	✘
Playhouse	X	X	X	X	X
Ring trek			X	X	X
Sand table	✘	✘	✘	✘	✘
Slide			✘	✘	✘
Spring rocking equipment	✘	✘	✘	✘	✘
Stationary bridge	✘	✘	✘	✘	✘
Swing - to-fro	X	X	X	X	X
Swing - rotating	✘	✘	✘	✘	✘
Track ride			✘	✘	✘
Tunnel	✘		✘	✘	✘
Composite structure	X	X	X	X	X

[1] With upper body strength.
[2] Without upper body strength.
✘ - Recommended play event.

CHAPTER 9

PLAY AREA COMPONENTS

9-1. Introduction.

A play area is more than a collection of play equipment. Many different component parts work together to support child development and play in a quality play environment. Some components create defined settings that support play activities, such as sand play, dramatic play, and pathways. Other play area components, such as gathering places and signage, provide comfort and convenience for users. This chapter provides design guidelines for play area components. For each component, design considerations, age appropriateness, safety considerations, and required level of maintenance is identified.

9-2. Maintenance Requirements.

Maintenance requirements are an important factor to consider when selecting play area components. Rough estimates of required maintenance for the play area components are summarized in table 9–1. Actual maintenance needs cannot be determined until the design elements for each component are selected.

9-3. Entry Area.

Play area entrances should create a welcoming feeling. Defined entrances may serve as social gathering places and locations for displaying community information. Play components may also have a defined entry. For example, the entrance to the dramatic play component can be marked by an arch, flag, or banner. Entries may also include play activities, such as games or interactive exhibits.

Table 9–1. Maintenance Requirements for Play Area Components.

Play Area Components	Maintenance Level		
	Low (< 3 hrs/mo)	Moderate (3-5 hrs/mo)	High (> 5 hrs/mo)
Entry area	x		
Pathways		x	
Sports and games	x		
Dramatic play			x
Sand play			x
Garden			x
Gathering place		x	
Manufactured play equipment		x	
Plant materials		x	
Landforms			x
Separation and barriers	x		
Signage	x		
Parking	x		

x - Maintenance level.

a. Design Elements. An entry may include: arches and gateways, pathways, sculpture and other art work, community bulletin boards, informational signs, interpretive signs, graphic signage, interactive play events, surfacing, seating, tables, bike racks, drinking fountains, restrooms, shelters, vegetation, and trash receptacles. Temporary or permanent embellishments may include banners, flags, decorations, and posters.

b. Recommended Ages. All ages will use the entry.

c. Safety Concerns.

(1) *Visibility.* Visibility from the surrounding neighborhood should not be obstructed. Design elements such as vegetation should not block views into the play area from adjacent streets or housing.

(2) *Separation From Traffic.* Entries should be separated from parking and traffic with barriers, such as bollards.

(3) Signage. Entries are a good location for informational signage describing play area layout and the age groups served. However, it should not be assumed that children will read and understand written warning signs.

d. Maintenance Level. The level of maintenance required for this play area component is low. A well-maintained entrance creates a positive first impression of' the play area.

9-4. Pathways.

Two types of pathways may be provided. Primary pathways provide accessible routes of travel to the play area, around the play area, and to all accessible activities within a play area. Auxiliary pathways are secondary pathways.

a. Design Elements. Pathways may include: surfaces, curb cuts, ramps, crosswalk markings, curbs, vegetation, seating, signage, and lighting.

(1) *Pathways Layout.* Pathways should be installed along likely routes of pedestrian travel.

(2) *Primary Pathways Leading To and Around the Play Area.* When a road crossing cannot be avoided in order to reach the play area, curb cuts, ramps, and crosswalk markings should be provided.

(3) *Primary Pathways Within Play Areas.* Primary pathways connect various play area components, such as manufactured play equipment, sand play, and dramatic play.

(a) Loop Pathways. Loop pathways are preferred to accommodate continuity of movement. Including branches and decision points increases the child development opportunities provided.

(b) Bikeways. Primary pathways should be designed to accommodate wheeled toys and bikes. In large parks and play areas where heavy bike traffic is anticipated, a separate bikeway may be constructed adjacent to primary pathways.

(4) *Auxiliary Pathways Within Play Areas.* Auxiliary or secondary pathways allow children to explore the environment. Surfacing materials, such as packed soil, gravel, and woodchips, which provide more challenge for children with disabilities, may be used on auxiliary pathways. Auxiliary pathways can accommodate a variety of play activities, including hiking, biking, wheeled toy play, interpretive activities, and hide and chase games. An auxiliary pathway with more challenging terrain can also serve as an adventure bike path for youth age 9 to 15.

(5) *Bicycle parking.* Bicycle parking areas should be located adjacent to pathways, but away from congested pedestrian areas. Bike racks should be provided.

(6) *Textures.* Changes in pathway texture may be used to indicate an interesting design feature, seating area, or sign location, or may serve as a warning texture for individuals with visual disabilities. Changes may be achieved by use of a different paving material, varied paving treatment such as multiple score joints, or a contrasting pavement color.

(7) *Service Vehicle Access.* A minimum 3 to 3.6 m (10- to 12-foot) wide maintenance access point should be provided.

b. Recommended Ages. All ages will use pathways.

c. Safety Concerns.

(1) *Crosswalks.* Auditory warnings and traffic lights are recommended at busy street crossings.

(2) *Dead-Ends and Congested Pathways.* Avoid creating dead-ends or inadequate, congested pathways where users might collide.

(3) *Pathways Within Use Zones.* Synthetic safety surfacing that is stable, firm, and slip-resistant will be installed on pathways within play equipment use zones.

(4) *Bold Patterns or Colors.* Bold patterns, such as checkerboards, or bright colors that may be disorienting over a continuous pathway surface should be avoided.

(5) *Conflict of Use.* Conflict of use is a major safety factor if bikeways are not separated from circulation paths, play areas, or vehicular traffic. Separate bike lanes or fast and slow lanes are recommended for primary bikeways that may be used for high speed travel.

(6) *Bike Racks.* Bike racks should be selected that are not tempting as a climbing structure.

(7) *Lighting.* Lighting should be provided along all primary pathways intended for night use.

(8) *Drainage Grates.* Drainage grates should be designed to prevent incorrect placement of grates by maintenance staff.

d. Maintenance Level. The level of maintenance required for this play area component is moderate.

9-5. Sports and Games.

Ball play is a universally popular play activity. The popularity of ball games varies with the seasons. Many ball play areas serve more than one function during the year. For example, some ball play areas accommodate both baseball and soccer. Guidance for the planning and design of outdoor sports facilities is provided in TM 5–803–10/AFM 88–33.

a. Design Elements. Sports and games components may include: multiple use hard surfaces or turf areas required for specific sports and games, surfacing, ball walls, fences, vegetation, drinking fountains, storage, lighting, seating, and trash receptacles.

(1) *Multiple Use.* Designs that can accommodate more than one type of sport, as well as community events, such as picnics and festivals, are preferred. An irregular boundary that accommodates the estimated distance of ball travel and is defined by a vegetative barrier adds visual interest and encourages multiple use.

(2) *Surfacing.* Surfacing is an essential consideration. Hard surfaces are required for some ball games. Turf is preferable for other sports and games.

(3) *Ball Walls.* Ball walls should be provided at a height of *3* to *3.6* m (10 to 12 feet) to contain balls. Several walls may be provided. Curved walls add interest. Ball walls also make excellent surfaces for murals.

(4) *Limited Space.* Sports and games components, such as half-court basketball, can be provided even when available space does not accommodate full-size sports fields. Smaller courts are easier to incorporate into an irregular layout and are often in high demand. When space allows, a full-size court may be provided that can also function as two half-courts. Badminton and volleyball do not require special court surfaces or regulation dimen-

sions for informal play, but a relatively flat surface should be provided. Tetherball is a game for school-age children that requires little space. Outdoor ping-pong tables have low space requirements and may be provided in low wind areas or in high wind areas if wind protection is adequate.

(5) *Drainage.* A minimum 2% slope for positive drainage should be provided for open turf areas and sports fields. Flat grades should be avoided.

b. Recommended Ages. Sports and games components are recommended for children ages 3 and older. Younger children participate in cooperative group activities while older children enjoy competitive sports.

c. Safety Concerns.

(1) *Multi-Use Hard Surfaces.* Multi-use hard-surfaced sports areas will not intrude into play equipment use zones.

(2) *Falls and Collisions.* Recognize that pedestrian falls onto hard surfaces and collisions are the most common forms of minor injury. These types of injuries are difficult to prevent.

(3) *Shade.* Partial shade should be provided for comfort.

(4) *Water.* Access to drinking water should be provided to prevent dehydration.

(5) *Lighting.* When night use is anticipated, lighting should be provided.

d. Maintenance Level. The level of maintenance required for this play area component is low.

9-6. Dramatic Play.

Children from preschool age to teenagers engage in dramatic play. At age 3, children play house and mimic domestic roles. At age 9, super heroes and "real life" role models, such as teachers, provide material for role plays. At age 15, dramatic play focuses on social interaction. Young children through teens enjoy attending and participating in performances. Because the types of dramatic play vary at different ages, the design elements included in dramatic play components intended for different age groups will vary.

a. Design Elements. Dramatic play components may include: playhouses, play platforms, pathways, vegetation, shade, water elements, and seating.

b. Recommended Ages. Dramatic play components are recommended for children ages 18 months to 15 years.

c. Safety Concerns. Surfaces that are trip- and slip-resistant under wet and dry conditions should be provided.

d. Maintenance Level. The level of maintenance required for this play component is high.

9-7. Sand Play.

Sand is an excellent medium for creative play and social interaction. When combined with water, sand offers even greater play potential. Sand can serve both as a play material and as a safety surface. Sand play components should be designed to accommodate groups of varying sizes.

a. Design Elements. Sand play components may include: sand; water elements; containment barriers; sand tables; seating; playing surfaces, such as boulders, tables, or shelves; and vegetation.

(1) *Type of Sand.* A fine, washed plaster sand is best for sand play and construction. Sand should be free of soil, clay, silt, oxides of iron, or other contaminants.

(2) *Depth of Sand.* A 450 to 600 mm (18- to 24-inch) depth of sand should be provided for sand play areas.

(3) *Water Supply.* A variety of water elements may be provided. A spring-loaded or dripping, tamperproof faucet is recommended. Hoses, hand water pumps, or trickling water troughs may also be used. Drinking fountains should be located away from sand play areas.

(4) *Ambient Microclimate.* The area should be protected from prevailing winds. Depending on site conditions, shade may be desirable. However, all sand play areas should receive sun for at least part of the day.

(5) *Drainage.* Positive drainage should be provided to avoid water-logging.

(6) *Barriers.* Barriers keep sand in place and discourage children in adjacent areas from disturbing the sand play of others. Barriers may include seating or sand shelves for play. A variety of places for individual and small group play for one to four children should be provided. These smaller areas may be connected to a larger sand area. Shallow sand benches or tables allow standup play and wheelchair accessibility.

(7) *Play Surfaces.* Play surfaces within the sand area include sand tables, boulders, and shelves. These surfaces may be used as work surfaces, seating, and back support.

(8) *Play Props.* Children like to play in sand with small toys, especially pocket-sized trucks, animals, and vehicles, or with props found onsite, including vegetation. A variety of play surfaces support this activity.

b. Recommended Ages. Sand play components are recommended for children ages 12 months to 8 years.

c. Safety Concerns.

(1) *Cleaning.* Sand play areas will require daily cleaning to remove litter, broken glass, and cat and

dog feces. Sunlight and adequate drainage should be provided to keep sand free of microorganisms.

(2) *Slip Hazards.* Sand creates slip hazards when spilled onto concrete or asphalt.

(3) *Sand Particles.* Sand particles may be ingested or inhaled by small children. The particles may cause eye abrasions when thrown, blown, or rubbed into the eye.

d. Maintenance Level. The level of maintenance required for this play are a component is high.

9-8. Gardens.

Gardens allow children to observe plants throughout the life cycle and harvest plant materials for play, cooking, craft, and science activities.

a. Design Elements. Gardens may include: vegetation, planters, fencing, storage, water, irrigation, compost bins, tables, and seating. Fencing with lockable gates should be provided for formal gardens.

b. Recommended Ages. Gardens are recommended for children ages 3 years and older.

c. Safety Concerns.

(1) *Tools.* Lockable storage should be provided for tools.

(2) *Harmful Plants.* Poisonous plants and plants with thorns or berries should be avoided.

d. Maintenance Level. The level of maintenance required for this play area component is high.

9-9. Gathering Place.

Gathering places should be designed to accommodate groups of different sizes and people of all ages. Gathering places may include: boulders set in a circle as seating; seating constructed from large timbers or logs; a meadow enclosed on three sides by trees to create a room-like atmosphere for group gathering; and simple arrangements of site furnishings such as tables or benches.

a. Design Elements. Gathering places may include: tables, shelters, benches, infant crawl areas, trash receptacles, boulders, logs, timbers, shelters, and vegetation.

(1) *Shelters.* Covered shelters may be provided for shade and protection from weather.

(2) *Tables.* Tables should be provided for gathering, working, eating, and game playing.

(3) *Seating.* Comfortable adult seating should be provided. Adult seating should be located in both sunny and shaded locations and should allow clear supervision sight lines. Seating should be provided for children. Some seating should be located on the edge of play activity areas where children can observe activities. Seating may include benches, infant crawl areas, planter walls, boulders, logs, timbers, etc. Seating should be provided at 200 to 300 mm (8 to 12 inches) high for children under 5 years and 300 to 430 mm (12 to 17 inches) high for children ages 5 through 12 years old.

(4) *Infant Crawl Area.* Gathering places may include a turf-covered infant crawl area. The infant crawl area should be provided adjacent to adult seating areas. Crawl areas should be partially or fully shaded.

(5) *Trash Receptacles.* Trash receptacles should be provided along paths, near seating areas, in eating areas, and at play area entrances. Dumpsters should be located away from play areas for convenience and sanitation.

(6) *Vegetation.* Vegetation can be used to separate a gathering place from other parts of the play area, providing a feeling of privacy and reducing noise from adjacent play areas. Vegetation should be used to protect gathering places from cold winds and to provide shade.

b. Recommended Ages. Gathering places are recommended for all ages.

c. Safety Concerns.

(1) *Location.* Site furnishings should not conflict with play activities, block paths of travel, or create trip hazards. Seating should be located to allow adults to comfortably view children at play.

(2) *Trash Receptacles.* Trash receptacles with removable lids should be provided for easy trash removal. Drain holes in dumpsters and receptacles should be plugged or covered with mesh screening.

(3) *Harmful Plants.* The use of toxic plants, plants with thorns, plants with berries, and trees that drop limbs should be avoided.

(4) *Boulders.* Large boulders may be used for seating in play areas intended for children ages two and older. Boulders should be composed of granite, feldspar, schist, or other solid, noncrumbling rock. Artificial boulders such as those simulated from concrete may also be used. Boulders should be free of sharp corners, open cracks or holes. Boulders should be a maximum size of 600 mm (24 inches). Boulders should be set firmly into the soil to prevent rolling, rotation, or settling. At least 30% of a boulder should be buried.

(5) *Logs.* Logs with a maximum diameter of 600 mm (24 inches) should be selected. The logs should be set firmly into the soil to prevent rolling, rotation, or settling. At least 30% of a log should be buried.

(6) *Wood Preservatives.* Wood preservatives will meet the requirements of CPSC and ASTM F 1487.

(7) *Visibility.* Visibility into gathering areas should be provided from more than one location on the play area.

(8) Shade. Shade maybe especially desirable where people may be sitting for more than a few minutes. Shade can be provided with trees, canopies, trellises, etc.

d. Maintenance Level. The level of maintenance required for this play area component is moderate.

9-10. Manufactured Play Equipment.

Manufactured play equipment will be carefully selected to meet safety guidelines for the primary age group of the play area users. Safety surfacing will be provided in manufactured play equipment use zones.

a. Design Elements. Manufactured equipment components may include both freestanding equipment, such as climbers, swings, slides, and balance beams, and composite structures that include more than one play event.

b. Recommended Ages. Manufactured play equipment components are recommended for children from infant to 12 years. Separate age-appropriate manufactured play equipment areas should be provided for children under 5 years. Young children have been gravely injured while playing on equipment intended for older children, sometimes while parents are facilitating their play. Similarly, serious accidents may occur when older children use equipment designed for children under 5 years.

c. Safety Concerns. Children will use play equipment in ways that were never intended. Therefore, play area designers should design the environment so that children's misjudgments do not result in life-threatening injuries. Play equipment will meet all the safety guidelines provided by CPSC, ASTM F 1292, and ASTM F 1487, as well as all additional guidelines described in this manual. Safety surfacing will be provided throughout play equipment use zones.

d. Maintenance Level. The level of maintenance required for this play area component is moderate.

9-11. Plant Materials.

Plant material provides children with opportunities for nature exploration, props for play, settings for social interaction, and climbing opportunities. Existing vegetation provides a mature and unique character in the play area. Native plants or plants adapted to the local climate create a regionally appropriate character. Except when required for play value, plants with low life cycle costs and low maintenance requirements are preferred.

a. Design Elements. Design elements may include: plants selected from local plant lists; seating; water; irrigation; planters; containment barriers; ground surfaces; and tree guards.

b. Recommended Ages. Plant material is used by all age groups.

c. Safety Concerns. Important considerations include: toxic or undesirable plant material; surfacing; protrusions and entrapment; visibility; and use of pesticides, herbicides, and fertilizers.

d. Maintenance Level. The level of maintenance required for this play area component is moderate.

9-12. Landforms.

Landforms provide spatial variety and create the opportunity to experience three-dimensional space.

a. Design Elements. Design elements may include: hills, slopes, earth mounds, boulders, stepping stones, logs, seating, bridges, surfaces, and vegetation.

(1) Existing *Landforms.* Slopes, varied topography, and land forms satisfy many play needs. Existing landforms should be retained when possible.

(2) *Landform Site Improvements.* Earthmoving and related site improvements can be expensive. Site improvement opportunities will vary depending on existing site conditions and budget. A simple approach may include creating a small mound on a flat site by importing material. An extensive approach may involve complete regrading to create a continuously varied ground surface with topographic features.

(3) *Low Mounds.* Low mounds provide challenge without the potential of falls from elevated heights. Through careful manipulation of landforms, access can be provided without the use of ramps.

(4) Berms. Berms or natural hills may be used to provide access for children with disabilities up to and onto equipment.

(5) Slides. Slides that are incorporated into slopes can pose little potential for falls. Landforms may be designed to provide access to the slide entrance for children in wheelchairs.

b. Recommended Ages. All ages can make use of landforms.

c. Safety Concerns.

(1) *Slopes.* Slopes should be appropriate to the age of users. Steep slopes should be avoided.

(2) *Dropoffs.* Sudden dropoffs should be avoided.

(3) *Guardrails.* Paths and ramps should be evaluated to determine whether guardrails are needed.

(4) *Bridges.* Bridges between mounds should meet requirements for play equipment stationary bridges, including requirements for protective barriers, entrapment, and use zones.

d. Maintenance Level. The level of maintenance required for this play area component is high due to possible erosion and handmowing requirements.

9-13. Separation and Barriers.

Separation and barriers should be used to define the spatial organization of the site, to define the pattern movement, to enclose play component areas, and to protect plantings. Barriers, such as low walls or vegetation, should be used to separate age groups with conflicting safety needs or to prevent circulation through high activity areas.

a. Design Elements. Design elements may include: fencing, gates, pathways, vegetation, containment barriers, play walls, and art displays.

(1) *Height.* Separation and barriers should be high enough to stop direct forward movement into areas where traffic or adjacent land use features could create a hazard.

(2) *Materials.* Materials that support the design purpose should be selected. Separation and barriers may be transparent or solid. Undesirable views can be screened with solid barriers. Barriers may be metal, wood, chainlink, mesh, concrete, or vegetative.

(3) *Play Elements.* Play experiences may be incorporated into the design of fencing and barriers where appropriate. For example, peek-a-boo holes, chalking surfaces, child-created mosaic walls, and murals may be incorporated. Nooks and hangouts may be formed by varying fence lines.

(4) *Appearance.* Highly visible separation and barriers should be attractive from adjacent sites. Shrub plantings, ground covers, and vines should be used to screen unsightly fences.

b. Recommended Ages. Separation and barriers should be provided for all ages when needed.

c. Safety Concerns. The following safety concerns apply:

(1) *Enclosure.* When fencing is required to protect children from hazards, such as traffic or bodies of water, fences should be a minimum height of 1200 mm (48 inches). Fencing and gate designs that can be easily climbed or crawled through should be avoided.

(2) *Visibility.* Visibility into the play area should be provided from more than one location.

(3) *Entrapments.* The space between the bottom of the fence or gate and the ground surface should not exceed 50 mm (2 inches).

(4) *Sharp Objects.* If chainlink fencing is provided, the bottom of the fencing should have woven ends or continuous loops with no exposed sharp wires.

d. Maintenance Level. The level of maintenance required for this play area component is low.

9-14. Signage.

Signs should communicate information to people of all ages and abilities. Signs should be colorful and playful.

a. Design Elements. Signs may be informative, directional, or regulatory.

(1) *Informative Signs.* Informative signs present general information both with text and graphics for those who cannot read. Signs may address the site layout and programs available at the site. Signs can educate people about the historic or natural site features. Temporary signs, such as banners, may be used to advertise special events. Identification signs present information in both words and pictograms to identify specific features or facilities.

(2) *Directional Signs.* Directional signs indicate directions to a space or facility. Arrows or other graphic symbols should be used. Directional signs should be located at the site entry and all decision points.

(3) *Regulatory Signs.* Regulatory signs present notification of rules, requirements, warnings, and restrictions, and are used for traffic delineation and control. Regulatory signs may be used to convey safety information, such as the intended age group for a play area.

(4) *Design.* Graphic signs should be emphasized, especially for child-oriented or child-designed signs. International characters and symbols should be used when possible. Although there are no standardized graphic signs for playground areas, the American Institute of Graphic Arts (AIGA) has evaluated symbols used in transportation-related facilities and at international events. Based on their analysis, a standardized set of graphic symbols for public services, concessions, regulations, and transportation-related processing activities was developed. Some of these symbols may be appropriate for playground signage, such as the symbols developed for restrooms, drinking fountains, parking/no parking, no pets, no entry/exit, and litter disposal. Refer to *Symbol Signs* (AIGA) for guidance.

(5) *Play Activities.* Signs may be designed as play activities with tactile, auditory, interactive, or manipulative parts.

b. Recommended Ages. Signage is used by children 2 years and older, as well as by adults.

c. Safety Concerns. Regulatory signs may be used to provide information on play area safety. However, it should not be assumed that children will be able to read signs or to comprehend the implications of the message. Providing signage that identifies the age of the designated play area user group may assist parents in selecting safe play areas for children.

d. Maintenance Level. The level of maintenance required for this play area component is low.

9-15. Parking.

Offstreet parking areas may be provided for play areas serving the entire installation.

a. Design Elements. Design elements include bollards, hard surfaces, lighting, and signage.

(1) *Parking Design.* Military design standards should be followed for parking area design.

(2) *Signage.* Signage should be provided to identify dropoff zones and limit use of these zones to "pickup/dropoff" functions.

(3) *Lighting.* Adequate lighting should be provided.

b. Recommended Ages. Offstreet parking should be provided at neighborhood and destination parks serving all age groups.

c. Safety Guidelines.

(1) *Separation.* Parking areas should be separated from play and circulation areas.

(2) *Automobile Circulation.* One-way traffic circulation should be provided. Backup and turnaround maneuvers should be minimized through careful orientation of automobile circulation.

(3) *Dropoff Zone.* Where the dropoff zone is at the same grade as the adjacent walk, bollards or some other suitable device should be provided to separate the two functions.

(4) *Bollards.* Bollards should contrast in color with the ground surface. Lighting should be provided to minimize the risk of a person inadvertently walking into bollards.

d. Maintenance Level. The level of maintenance required for this play area component is low.

CHAPTER 10

MANUFACTURED PLAY EQUIPMENT

10-1. Introduction.

Manufactured play equipment (MPE) components should be designed as one part of a comprehensive multipurpose play area. Isolated pieces of play equipment alone do not address children's developmental needs. Most MPE stimulates gross motor and sensory development. However, properly selected play equipment can also support the nonphysical aspects of child development. New designs are now beginning to address the safety and development of children under age 5, children over age 10, and those with disabilities. This chapter describes safety and accessibility guidelines for manufactured equipment and specific play events. A list of play events that are not recommended for unsupervised children's outdoor play areas is provided. Guidelines for composite structures and recommended composite structure layouts are included.

10-2. Freestanding and Composite Structure Play Events.

Many play events may be installed as freestanding equipment or may be attached to a composite structure. A composite structure consists of two or more play events that are attached or functionally linked to create one integral unit that provides multiple play activities. When play equipment emphasizes large muscle activity, a composite structure is preferable to isolated pieces. When equipment supports quiet social activity, such as playhouses or game panels, separate equipment in a low activity location may be preferred. Child safety also determines play equipment layout. For example, to-fro swings must be located at the edge of the play area and not be attached to composite structures to minimize injuries that occur when children run in front of swings. Table 10–1 lists play events and identifies those that may be installed as freestanding structures and those that may be installed as composite structures.

10-3. Safety Guidelines for Manufactured Play Equipment.

All manufactured equipment will meet general SC, ASTM F 1487, and this manual. A playground safety surface that meets the requirements of ASTM F 1292 for the highest accessible height of the equipment should be installed over ground surfaces throughout the equipment use zone.

Table 10-1. Freestanding and Composite Structure Play Events.

Play Event	Freestanding Structures	Composite Structures
Balance beam	X	X
Banister slide		X
Chinning/turning bar	✘	✘
Clatter bridge	✘	✘
Climber	✘	✘
Climber - arch	X	X
Climber - net	X	X
Fire pole		X
Game panel	X	X
Horizontal ladder	✘	✘
Parallel bars	X	X
Playhouse	X	X
Ring trek	✘	✘
Sand table	✘	✘
Slide	✘	✘
Spring rocking equipment	✘	
Stationary bridge	✘	✘
Swing - to-fro	✘	
Swing - rotating	✘	
Track ride	✘	✘
Tunnel	✘	✘

X Appropriate installation.

10-4. Structural Integrity.

ASTM has developed test procedures that measure the load-bearing capacity of manufactured play equipment. It is the responsibility of manufacturers to conduct these tests on equipment. Before specifying equipment, written verification should be obtained from the manufacturer that the play equipment was tested in accordance with ASTM F 1487 and meets all standards for structural integrity.

10-5. Ladders, Stairways, and Ramps (Not for Wheelchair Use).

Ladders, stairways, and ramps are commonly used to provide access to and egress from play equipment. Equipment access and egress methods vary in difficulty. The level of challenge provided will be appropriate to the user's age group.

a. Rung Ladder Rung ladders have a rounded crosspiece that supports the user's feet or is grasped by the user's hands (fig 10–1).

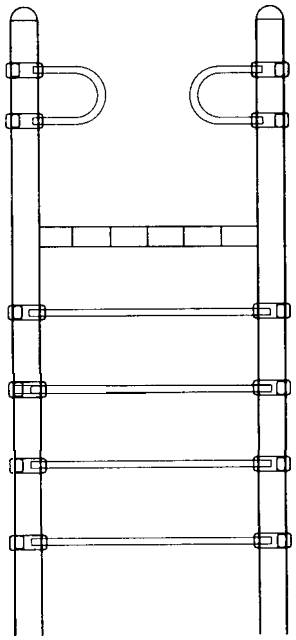

ADAPTED WITH PERMISSION. COPYRIGHT LANDSCAPE STRUCTURES, INC.

Figure 10–1. Rung Ladder

b. Step Ladder Step ladders have a flat horizontal crosspiece used as a foot support (fig 10–2).

c. Stairway. Stairways consist of a series of steps used primarily as a foot support (fig 10–3). Stairways may have open or closed risers, depending on the age group served. Stairways may be straight or spiral around a central point.

d. Ramp Not for Wheelchair Use. A ramp is a sloping surface less than or equal to 1:8 that provides access between levels by walking or crawling (fig 10–4). Wheelchair accessible ramps will meet guidelines provided in this chapter for ramps intended for wheelchair play equipment access.

e. Recommended Ages. Easy and more challenging access methods should be provided for all age groups. Stairways are one of the easiest play equipment entrances. Ramps are also suitable for both younger and older children. Step ladders and rung ladders are more challenging. Rung ladders should not be provided as the sole means of equipment access for children under 5 years.

(1) *Ages* 18 *to* 24 *Months.* Ramps or stairways with closed risers should be provided.

(2) *Ages* 2 *to* 5 *Years.* Ramps or stairways with closed risers should be provided. Open risers with the appropriate step height for this age group create a potential head and neck entrapment. Rung ladders and step ladders may be provided if a less difficult means of access and egress is also included

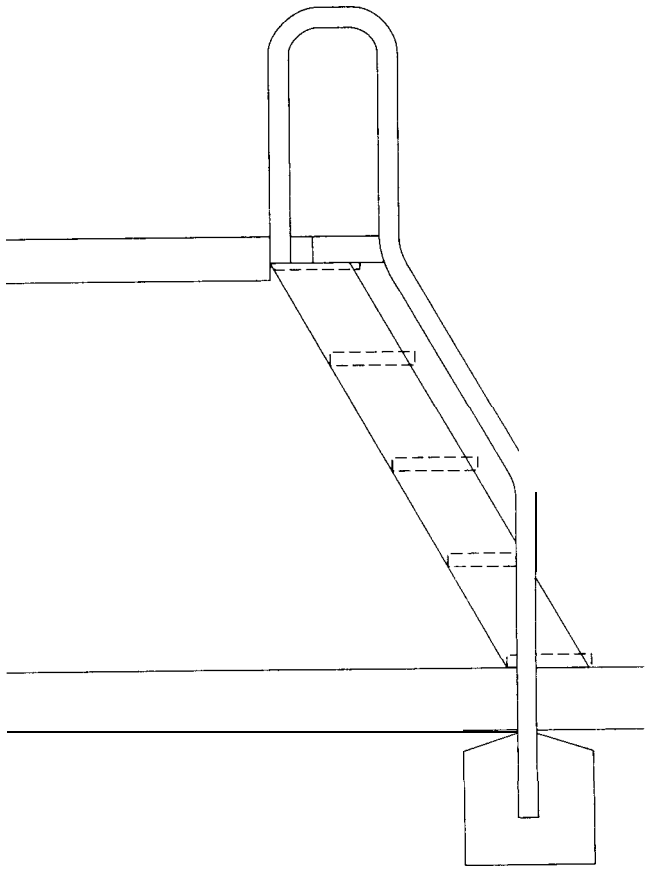

Figure 10-2. Step Ladder.

(3) *Ages 5 to 12 Years.* Rung or step ladders, stairways with open risers, spiral stairways with open risers, and ramps may be provided.

f. Steps and Rungs. Steps and rungs designed to minimize slipping and tripping should be selected.

g. Handrail. Handrails provide balance and support during equipment access and egress. For rung ladders, the vertical support posts and horizontal rungs provide hand support. Therefore, handrails are not required for rung ladders.

10-6. Transition to Platform.

Handrails and other handgripping devices provide hand support and balance as children move from platforms, play events, ladders, stairways, and ramps to platforms. Evenly spaced rungs and steps help ease the transition to platforms.

10-7. Platforms and Play Surfaces.

Platforms, landings, walkways, ramps, and other transitional play surfaces that reduce slipping and tripping should be selected. Surface materials that will not cut, scratch, or burn when slid upon, such as metal covered with a PVC coating, should be selected.

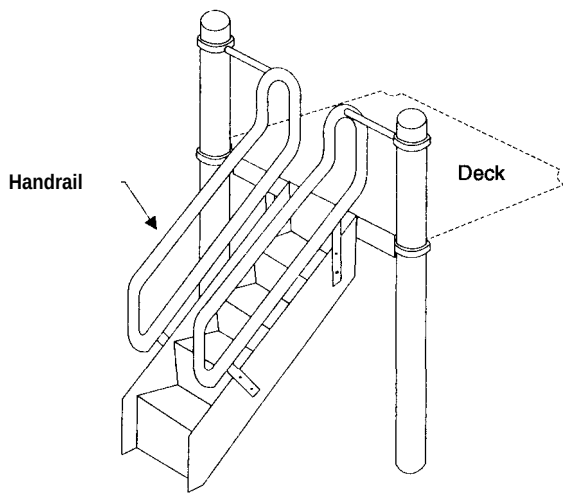

ADAPTED WITH PERMISSION. COPYRIGHT LANDSCAPE STRUCTURES, INC

Figure 10-3. Stairway,

10-8. Stepped Platform.

Graduated platforms may be used in the transfer system alone or in conjunction with a system of steps and platforms (fig 10–5) to transfer from a wheelchair onto play equipment.

10-9. Ramp Intended for Wheelchair Access.

Ramps intended for wheelchair play equipment access, which are 1500 mm (60 inches) wide or greater, should meet accessibility standards for adults with the exception of the handrail requirements described below (fig 10–6). Ramps which are 1500 mm (60 inches) wide or less should meet accessibility standards for adults with the following exceptions.

a. Maximum Cross Slope. The ramp cross slope will be a maximum of 1:50.

b. Ramp Length. The maximum ramp run or length will not exceed 3600 mm (12 feet).

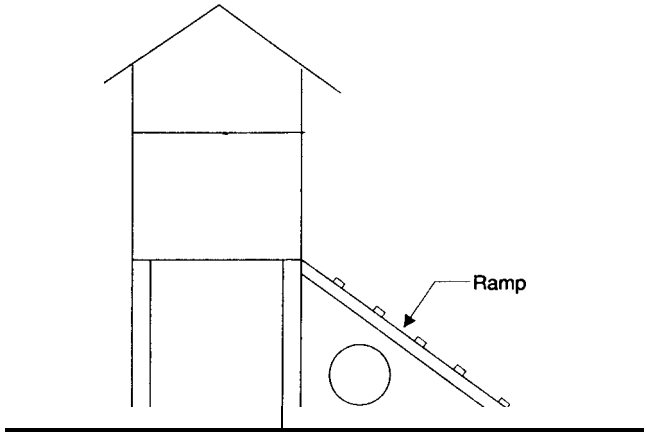

Figure I0-4. Ramp Not for Wheelchair Use.

c. Landing Dimensions. The bottom and top of the ramp run will be a minimum of 1500 mm (60 inches) in diameter. Landings which contain play events will include a minimum of 750 mm by 1200 mm (30 inches by 48 inches) clear space where a wheelchair user may park and play. A parked wheelchair will not reduce the adjacent circulation path to less than 900 mm (36 inches).

d. Parking Spaces at Elevated Play Events. Where ramp access is provided to an elevated play event, wheelchair parking spaces may overlap turning spaces.

e. Edge Protection. Edges of ramps and landing will have a means of preventing wheelchairs from falling off the landing.

f. Handrail Height. Handrails will be provided on each side of the ramp at 650 mm to 700 mm (26 inches to 28 inches) above the ramp surface.

10-10. Transfer Point.

A transfer point is a platform along an accessible route of travel that allows a wheelchair user to transfer from a wheelchair onto the play equipment (fig 10–7). The transfer point and adjacent stepped platforms or steps that allow a child to move through the equipment is called the transfer system.

a. Height of Transfer Point. For children 2 to 5 years old, the transfer point will be provided at a height of 275 to 350 mm (11 to 14 inches) above the accessible route of travel or the wheelchair accessible platform. For children 5 to 12 years old, the transfer point will be provided at a height of 350 to 425 mm (14 to 17 inches) above the accessible route of travel or the wheelchair accessible platform.

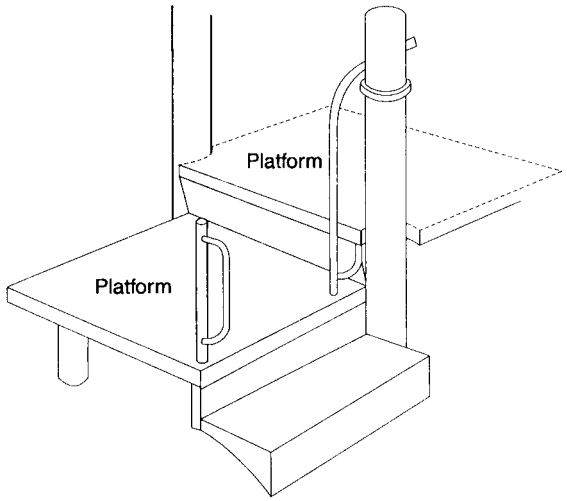

ADAPTED WITH PERMISSION. COPYRIGHT LANDSCAPE STRUCTURES, INC.

Figure 10–5. Stepped Platform.

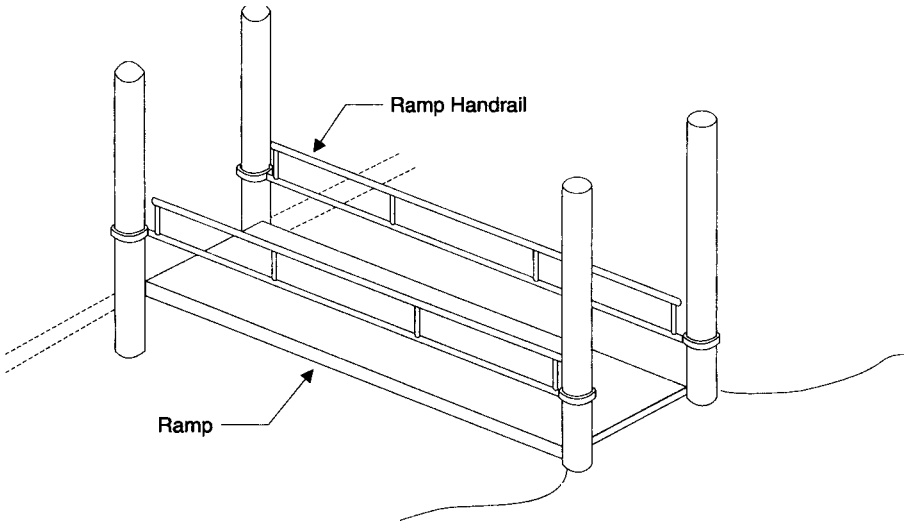

ADAPTED WITH PERMISSION. COPYRIGHT LANDSCAPE STRUCTURES, INC

Figure 10-6. Ramp for Wheelchair Play Equipment Access.

b. Size of Deck. The minimum clear width of the deck used in the transfer system will be 600 mm (24 inches) and the minimum depth of the platform will be 350 mm (14 inches).

c. Grab Bars or Hand Holds. A grab bar or hand hold will be provided to assist a child in transferring.

d. Steps or Platforms Adjacent to Transfer Point. Steps or platforms, adjacent to the transfer platform, that are used to move through the equipment will be fully enclosed. A maximum step height of 150 mm (6 inches) for children under 5 years old and a maximum step height of 200 mm (8 inches) for children over 5 years old will be provided.

e. Wheelchair Parking Area. A parking area, a minimum of 750 mm by 1200 mm (30 inches by 48 inches), adjacent to the transfer platform off of the accessible route of travel will be provided. It will accommodate one wheelchair.

(1) *Turning Space.* A turning space will be provided at the base of the transfer platform and off of the accessible path of travel. The turning space will provide a clear space of 1500 mm (60 inches) in diameter or a T-shaped area. The turning space and parking space may overlap.

(2) *Circulation Path.* The Parking space at the transfer point will not reduce the circulation path to less than 900 mm (36 inches).

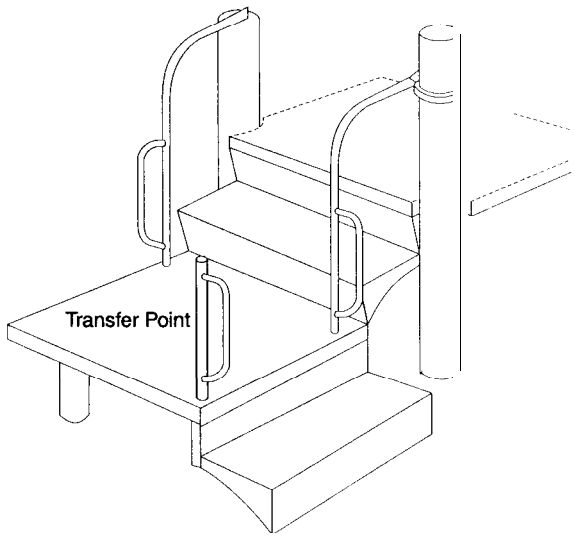

ADAPTED WITH PERMISSION. COPYRIGHT LANDSCAPE STRUCTURES, INC.

Figure 10–7. Transfer System.

(3) *Additional Wheelchair* Additional 750 mm by 1200 mm (30 inches by 48 inches) parking spaces that meet these requirements may be provided if necessary.

10-11. Recommended Play Events.

Play events recommended for unsupervised children's outdoor play areas are described below. This description includes the appropriate user age groups, safety guidelines specific to the play event, use zone requirements, adaptations for children with disabilities, and required maintenance level. The description identifies whether each event should be installed as freestanding equipment or as part of a composite structure.

10-12. Balance Beam.

A balance beam is a stationary or suspended beam designed to develop balance and coordination as children walk across it or balance on it (fig 10–8). It may be used as freestanding equipment or be attached to a composite structure.

a. Recommended Ages. Stationary beams are recommended for children ages 2 through 12 years, Suspended beams are recommended for children ages 5 through *12* years.

b. Trip Hazards. Balance beam support posts that extend above the level of the walking surface and create a trip hazard will not be provided.

c. Use Zone. A minimum 1800 mm (72-inch) use zone extending from all sides of the equipment will

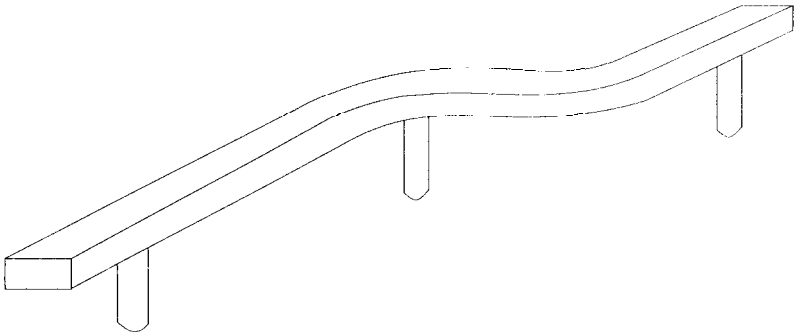

ADAPTED WITH PERMISSION. COPYRIGHT LANDSCAPE STRUCTURES, INC

Figure 10–8. Balance Beam

be provided. Two balance beams under 500 mm (20 inches) high may have overlapping use zones (fig 10–9).

d. Adaptations for Children With Disabilities. For children with perceptual problems, a brightly colored beam that contrasts with the safety surface should be selected.

e. Maintenance Level. The level of maintenance required for this play equipment is low.

10-13. Banister Slide.

A banister slide is a sliding pole that extends at an angle from the platform of a composite structure (fig 10–10). Children use the slide by straddling the pole. The activity is similar to sliding down a stair way banister. Banister slides should be attached to a composite structure. The slide should not be installed as freestanding equipment.

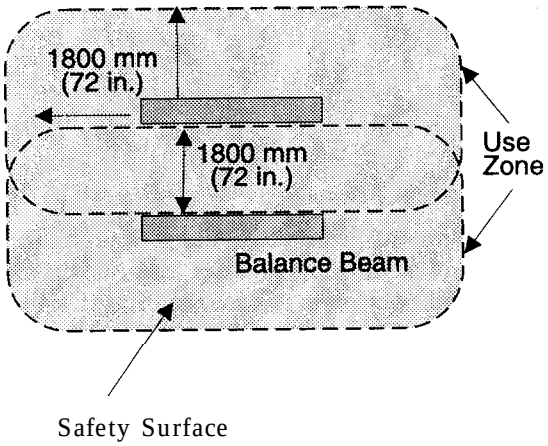

Figure 10–9. Two Balance Beams With (Overlapping Use Zones.

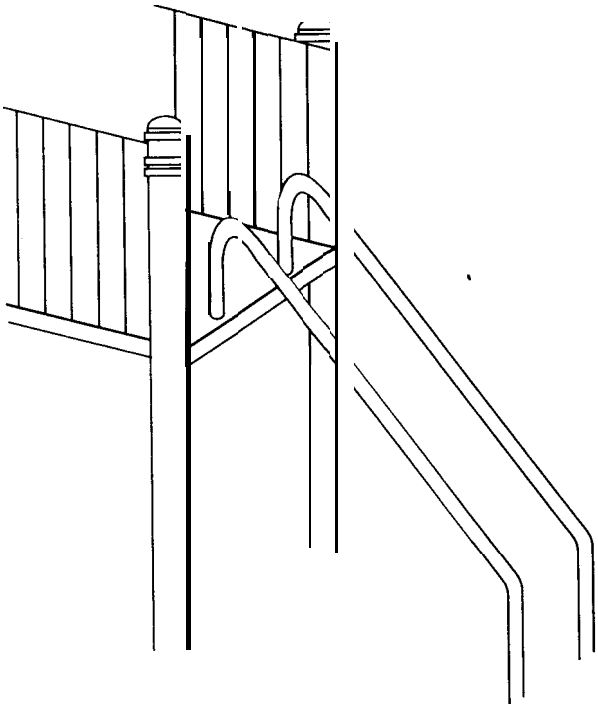

Figure 10–10. Banister Slide.

a. *Recommended Ages.* Banister slides are recommended for children ages 5 through 12 years. The equipment is not recommended for children under 5 years.

b. Safety Guidelines.

(1) Maximum Height of Attached Platform. The banister slide will be attached to a composite structure platform at a maximum height of 1400 mm (56 inches).

(2) *Pole Diameter.* The maximum pole diameter should be 50 mm (1–9/10 inches).

(3) *Pole Surface.* A pole with a smooth, continuous surface will be provided. Bolts or seams should not be allowed to protrude along the sliding surface.

c. Use *Zone.* A minimum 2400 mm (96-inch) use zone will be provided from all sides of the equipment.

d. Adaptations for Children With Disabilities. This activity is not readily accessible to children with mobility limitations because of strength and recovery requirements. Children with visual limitations may need assistance in recovery and dismounting.

e. Maintenance Level. The level of maintenance required for this play equipment is moderate.

10-14. Chinning and Turning Bar.

This play event consists of a horizontal bar supported by vertical posts (fig 10–11). It is used to develop upper body strength. Younger children strengthen muscles by hanging or swinging on the bars while supported by hands and arms. Older children may use the bar for pull-ups or turning somersaults. This equipment may be freestanding or be attached to a composite structure.

a. Recommended Ages. Chinning and turning bars are recommended for children ages 2 through 12 years.

b. Minimum Bar Height. A bar height that allows safe use when children are turning or hanging from bent knees should be provided. For children ages 2 to 5 years, a minimum bar height of 900 mm (36 inches) will be provided. For children ages 5 to 12 years, a minimum bar height of 1200 mm (48 inches) will be provided. The bar height should be measured from the center of the grasping device to the safety surface.

c. Use Zone. A minimum 2400 mm (96-inch) use zone from all sides of the equipment will be provided.

d. Adaptations for Children. With Disabilities. The bars may be installed at heights appropriate for

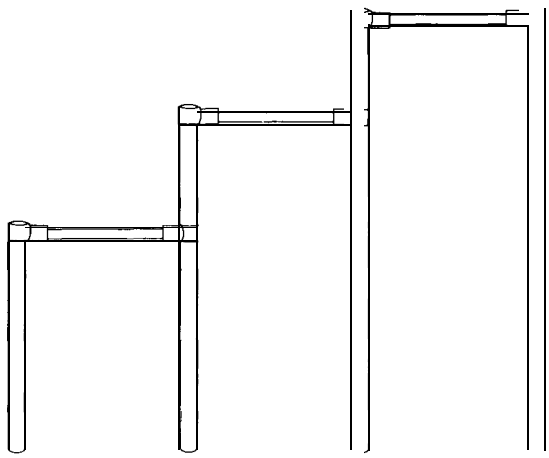

ADAPTED WITH PERMISSION. COPYRIGHT LANDSCAPE STRUCTURES, INC

Figure 10–11. Chinning and Taming Bar

children in wheelchairs. For wheelchair users, a maximum bar height of 1300 mm (54 inches) is recommended.

e. Maintenance Level. 'The level of maintenance required for this play equipment is low.

10-15. Clatter Bridge.

A clatter bridge is a moving bridge between two land areas or two platforms (fig 10--12). Although it may be used as freestanding equipment, it is typically part of a composite structure,

a. Recommended Ages. A clatter bridge is recommended for children ages 3 through 12 years.

b. Safety Guidelines

(1) Maximum Distance Between the Bridge and Attached Platforms. The bridge and attached platforms will be located at a maximum of 50 mm (2 inches) apart.

(2) *Maximum Bridge Height.* For children ages 2 to 5 years, the clatter bridge surface will be located at a maximum height of 750 mm (30 inches) above the safety surface. For 5 to 12 years, the clatter bridge surface will be located at a maximum height of 1200 mm (48 inches).

(3) *Guardrails.* Guardrails that meet the requirements of ASTM F 1487 will be provided to help prevent children from falling from the clatter bridge surface.

c. Use Zone. A minimum 2400 mm (96-inch) use zone from all sides of the equipment will be provided.

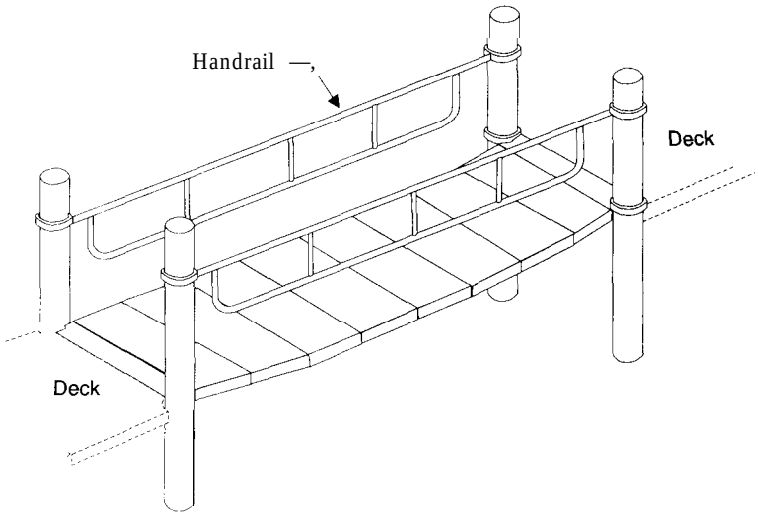

ADAPTED WITH PERMISSION. COPYRIGHT LANDSCAPE STRUCTURES, INC.

Figure 10–12 Clatter Bridge.

d. Adaptations for Children With Disabilities. Moving play events are difficult for children with balance problems. The traditional clatter bridge design, based on planks connected by chain, is not accessible to children in wheelchairs. A new flush-mounted design is available that is wheelchair-accessible. Children with physical disabilities may also scoot or crawl across the bridge.

e. *Maintenance Level.* The level of maintenance required for this play equipment is moderate.

10-16. Climber.

A variety of climber designs are available. This paragraph provides guidelines for climbers composed of rungs (fig 10–13). Rung climbers may be freestanding structures or be attached to a composite structure. When attached to a composite structure, the climber provides a challenging means of equipment access and egress. Platform-type climbers will meet guidelines for composite structures.

a. Recommended. Ages. Climbers are recommended for children ages 4 through 12 years.

b. Safety Guidelines.

(1) Composite Structure Access. Climbers will not be used as the sole means of composite structure access and egress. A less challenging means of entry and exit should be provided, such as stairways or stepped platforms. Climbers that provide hand support during climbing and at the transition point where the climber connects to the composite structure platform should be selected.

(2) *Maximum Height When Attached to Composite Structure.* For 4- to 5-year-olds, climbers with a maximum height of 1200 mm (40 inches) will be provided. For 5- to 12-year-olds, climbers with a maximum height of 1400 mm (56 inches) will be provided.

(3) *Maximum Height of Freestanding Climbers.* For 4- to 12-year-olds, climbers with a maximum height of 1500 mm (60 inches') will be provided.

(4) *Free Fall Design.* All climbers will have a free fall design. Climbers that have interior climbing bars that could be struck during a free fall from a height greater than 450 mm (18 inches) to the surface (fig 10–14) will not be provided.

c. Use Zone. A minimum 2400 mm (96-inch) use zone from all sides of the equipment will be provided.

d. Adaptations for Children With Disabilities. Children who use wheelchairs may be able to pull up to a standing position while holding onto this equipment.

e. Maintenance Level. The level of maintenance required for this play equipment is low.

10-17. Climber-Arch.

An arch climber consists of two arched supports connected by horizontal rungs (fig 10–15). The arch climber allows children to climb and hang from the structure in a variety of ways. Arch climbers may be freestanding structures or attached to composite play equipment. When attached to a composite structure, the arch climber provides a challenging method of equipment access and egress.

a. Recommended Ages. Arch climbers are recommended for children ages 4 through 12 years. Freestanding arch climbers should not be used by children under 4 years.

b. Safety Guidelines.

(1) *Composite Structure Access.* Arch climbers will not be used as the sole means of composite structure access and egress. A less challenging means of entry and exit, such as stairways or stepped platforms should also be provided. Arch

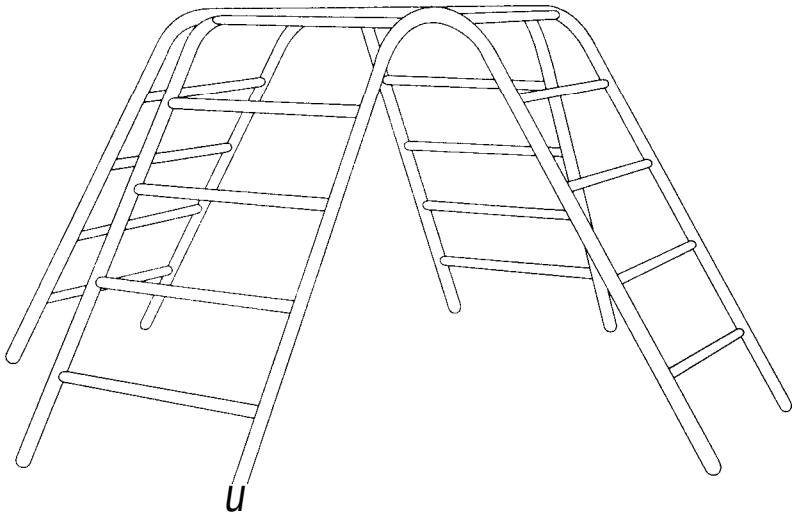

Figure 10-13. Climber Composed of Rungs

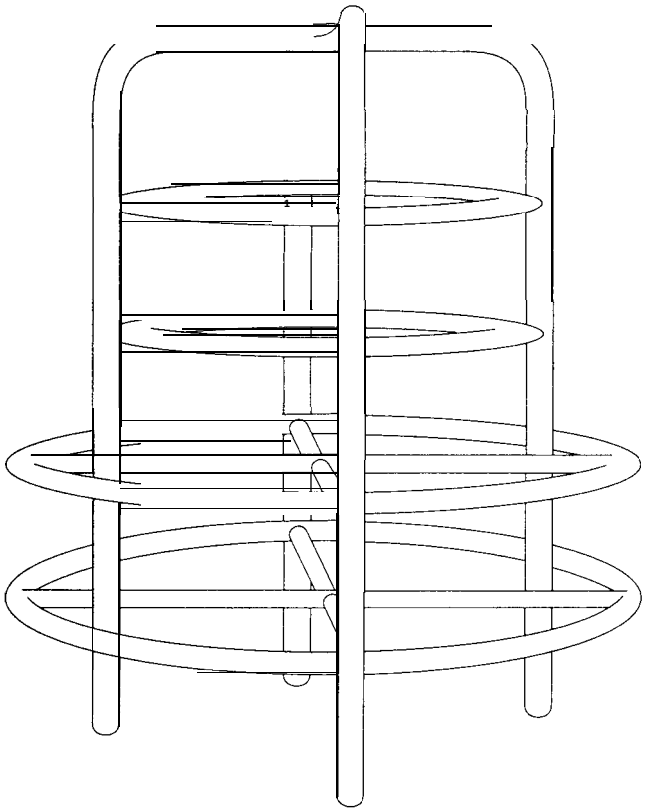

Figure 10-14 Climber With in.terlor Bars

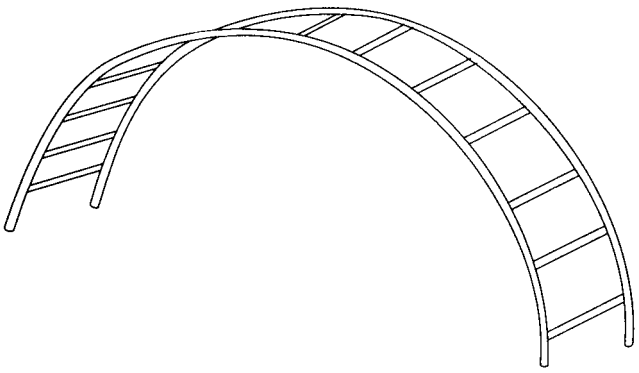

Figure 10 -15. Arch Climber.

climbers that provide hand support during climbing and at the transition point where the climber connects to the composite structure platform should be selected

(2) *Minimum Width of Rungs.* Climber rungs will be a minimum 400 mm (16 inches) wide.

(3) *Maximum Height of Arch When Attached to Composite Structure.* For 4- to 5-year-olds, arch climbers with a maximum height of 1200 mm (48 inches) will be provided. For 5- to 12-year-olds, arch climbers with a maximum height of 1500 mm (56 inches) will be provided.

(4) *Maximum Height of Freestanding Arch Climbers.* For 5- to 12-year-olds, arch climbers with a maximum height of 1500 mm (60 inches) will be provided.

(5) *Free Fall Design.* All climbers should have a free fall design. Climbers that have interior climbing bars that could be struck during a free fall from a height greater than 450 mm (18 inches) to the surface will not be provided.

c. Use Zone. A minimum 2400 mm (96-inch) use zone will be provided from all sides of the equipment.

d. Adaptations for Children With Disabilities. Children who use wheelchairs may be able to pull themselves up to a standing position while holding onto this equipment. Children with mobility limitations may pass under it.

e. Maintenance Level. The level of maintenance required for this play equipment is low.

10-18. Climber-Net.

Net climbers are flexible climbing equipment composed of cable, or chain (fig 10–16). Tire climbers should not be provided. Tires collect glass, trash, water, and harbor insects. Tire climbers are difficult to climb because of large, uneven distances between footholds. Climbers composed of cable are preferred over chain climbers. Cable climbers may be provided as freestanding equipment or may be attached to a composite structure. Net climbers will not be used as the sole means of composite structure access. A less challenging method of access and egress, such as stairways or stepped platforms, should be provided in addition to climbers.

a. Recommended Ages. Net climbers are recommended for children ages 3 through 12 years. For children under 5, net climbers composed of cable should be selected. For children ages 5 and older, net climbers composed of chain or cable may be selected.

b. Safety Guidelines.

(1) *Minimum Cable Diameter* For ease of gripping, a minimum cable diameter of 25 mm (l-inch) after coating will be provided.

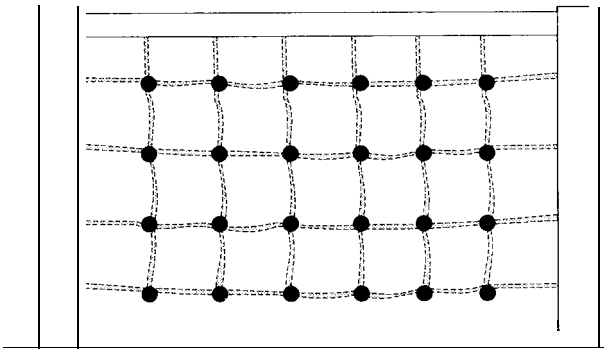

Figure 10–16. Net Climber

(2) *Slope.* For children ages 3 to 5 years, net climbers with a slope of 90° from the safety surface will be selected. For children ages 5 and older, net climbers with a slope of 60° or 90° from the safety surface will be selected.

(3) *Maximum Height.* Net climbers installed at 90° will have a maximum height of 2400 mm (96 inches). Net climbers installed at 60° will have a maximum height of 1400 mm (56 inches).

c. Use Zone. A minimum 2400 mm (96-inch) use zone from all sides of the equipment will be provided.

d. Adaptations for Children With Disabilities. Children who use wheelchairs and have upper body strength can pull themselves up by holding onto the equipment.

e. Maintenance Level. The level of maintenance required for this play equipment is high.

10-19. Fire Pole.

A fire pole is a vertical pole used as a sliding surface that is attached to the platform of a composite structure (fig 10–17). Children slide down the pole to the safety surface while gripping the pole with both arms and legs. Fire poles will be attached to a composite structure. The pole will not be installed as freestanding equipment.

a. Recommended Ages. Fire poles are recommended for children ages 5 through 12 years. The equipment is not recommended for children under 5 years.

b. Safety Guidelines.

(1) *Maximum Height of Attached Platform.* The fire pole will be attached to a composite structure platform that is a maximum height of 1400 mm (56 inches).

(2) *Access to the Fire Pole.* The space below the fire pole transition platform will be designed to prevent entrance from beneath the equipment into the fire pole use zone.

c. Use Zone. A minimum 2400 mm (96-inch) use zone will be provided from all sides of the equipment.

d. Adaptations for Children With Disabilities. This activity is not readily accessible to children with mobility limitations because of strength and recovery requirements. Children with visual limitations may need assistance in recovery and dismounting.

e. Maintenance Level. The level of maintenance required for this play equipment is moderate.

10-20. Game Panel.

Game panels are vertical surfaces that include a game, manipulative play event, or other play activity (fig 10–18). Game panels may be provided as freestanding equipment. As part of a composite structure, game panels can be used as a protective barrier or used as a ground-level play event.

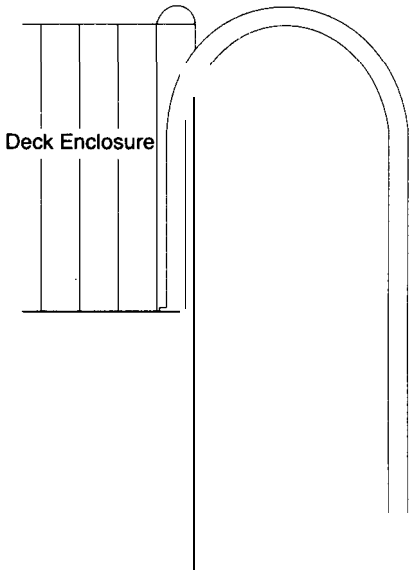

ADAPTED WITH PERMISSION COPYRIGHT LANDSCAPE STRUCTURES, INC

Figure 10-17. Fire Pole.

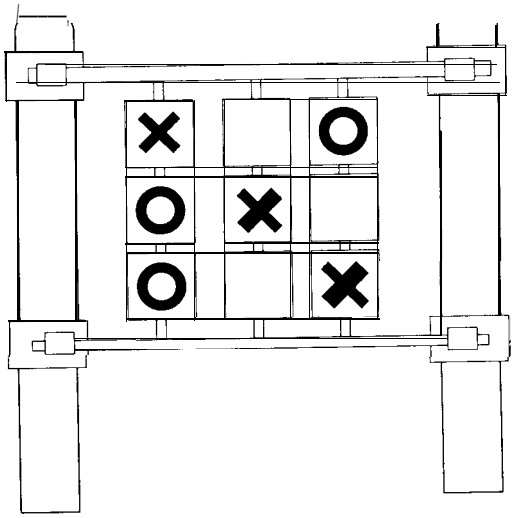

Figure 10-18. Game Panel.

a. Recommended Ages. Game panels are recommended for children of all ages.

b. Safety Guidelines. For infants to 2 years, game panels will be provided that are a minimum height of 500 mm (20 inches) when used as protective barriers. For children ages 2 to 5 years, game panels will be provided that are a minimum height of 725 mm (29 inches) when used as protective barriers For children ages 5 to 12 years, game panels will be provided that are a minimum height of 950 mm (38 inches) when used as protective barriers.

c. Use Zone. For infant to 2 years, a minimum 1800 mm (72-inch) use zone from all sides of the equipment will be provided. For children ages 2 through 12 years, a minimum 2400 mm (96-inch) use zone from all sides of the equipment will be provided.

d. Adaptations for Children With Disabilities. Games that incorporate sound, have tactile elements, and have interactive parts that contrast with the game background should be selected. Interactive parts will be located from 500 to 900 mm (20 to 36 inches) high for forward or side reach from a wheelchair. Game panels not used as protective barriers to enclose platforms can provide space not less than 600 mm (24 inches) high, 600 mm (24 inches) deep, and 750 mm (30 inches) wide that will allow a wheelchair to roll under for access.

e. Maintenance Level. The level of maintenance required for this play equipment is moderate.

10-21. Horizontal Ladder.

A horizontal ladder is a rung ladder suspended in a horizontal position between two platforms or vertical supports (fig 10–19). Using upper body strength, children hang from the rungs by their hands and travel from hand-to-hand across the ladder. This play event may be provided as freestanding equipment or be attached to a composite structure.

a. Recommended Ages. Horizontal ladders are recommended for children ages 4 to 12 years. This play event is not recommended for children under 4 years.

b. Safety Guidelines.

(1) *Rung Diameter* Climber rungs from 25 to 40 mm (0.95 to 1.55 inches) in diameter should be selected for ease of gripping.

(2) *Maximum Height.* The maximum height of horizontal ladders should be measured from the center of the grasping device to the safety surface. For 4- to 5-year-olds, a maximum equipment height of 1500 mm (60 inches) should be provided.

c. Use Zone. A minimum 2400 mm (96-inch) use zone from all sides of the equipment will be provided.

d. Adaptations for Children With Disabilities. For wheelchair users, a maximum equipment height of 1400 mm (54 inches) should be provided.

e. Maintenance Level. The level of maintenance required for this play equipment is low.

10-22. Parallel Bars.

Parallel bars are metal bars attached to vertical supports at a height that allows children to lift the body with the arms and hand-walk the length of the structure (fig 10–20). The bars may be provided as freestanding equipment or be attached to a composite structure.

a. Recommended Ages. Parallel bars are recommended for children ages 5 to 12 years.

b. Safety Guidelines.

(1) *Maximum Bar Height.* A maximum bar height of 900 mm (36 inches) will be provided.

(2) *Pole Diameter* Parallel bars with a pole diameter between 50 and 60 mm (1–7/8 and 2–1/2 inches) will be selected.

c. Use Zone. A minimum 2400 mm (96-inch) use zone will be provided from all sides of the equipment.

d. Adaptations for Children With Disabilities. Bars may be lowered to make them accessible to children who use wheelchairs and have upper body strength.

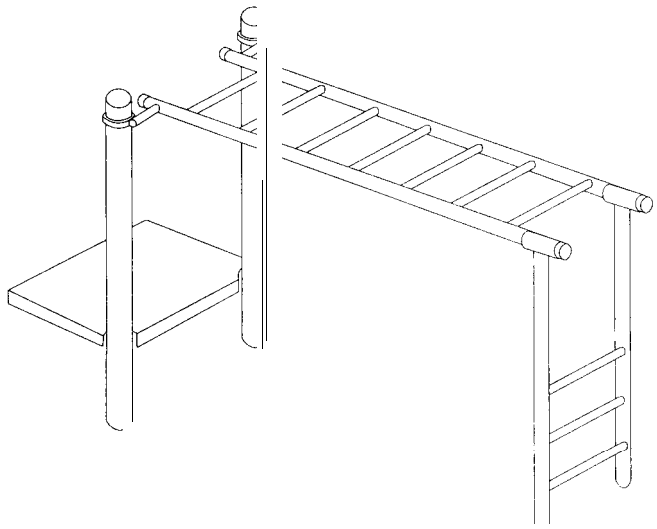

ADAPTED WITH PERMISSION. COPYRIGHT LANDSCAPE STRUCTURES, INC.

Figure 10- 19. Horizontal Ladder.

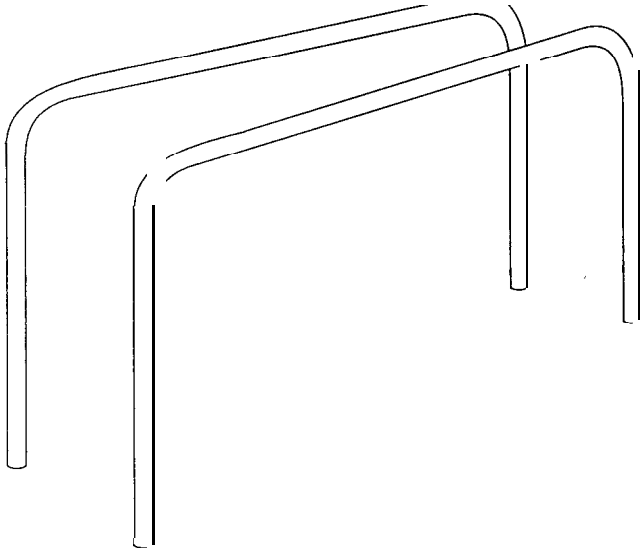

Figure 10–20. Parallel Bars.

e. Maintenance Level. The level of maintenance required for this play equipment is low.

10-23. Playhouse.

A playhouse is an enclosed structure designed primarily for dramatic play (fig 10–2 1). A variety of designs are available that may include roofs, windows, seating, table surfaces, store fronts, etc. A playhouse may have a climbable or nonclimbable design. The equipment may be freestanding. Playhouse-type components may also be attached to a composite structure.

a. Recommended Ages. Playhouses are recommended for children ages 12 months to 9 years. For 12 months to 4 years, freestanding playhouses with a nonclimbable design will be provided, For 5 years to 9 years, the freestanding playhouse may be climbable or nonclimbable.

b. Safety Guidelines.

(1) *Maximum Height of Freestanding Playhouse.*, Freestanding playhouses with a maximum height of 1800 mm (72 inches) measured from the roof ridge to the safety surface will be provided.

(2) *Clear Sight Lines.* Clear sight lines into the playhouse will be provided from more than one location.

(3) *Multiple Entrances and Exits.* More than one entrance and exit will be provided.

c. Use Zone. A minimum 1800 mm (72-inch) use zone extending from all sides of the equipment will be provided. Two nonclimbable playhouses may have overlapping use zones.

d. Adaptations for Children With Disabilities, A minimum 800 mm (32-inch) wide entrance to accommodate wheelchairs should he provided, An interior turning space of 1500 mm (60 inches) in diameter is optimal, but not mandatory. All trip hazards will be eliminated at entrances and exits.

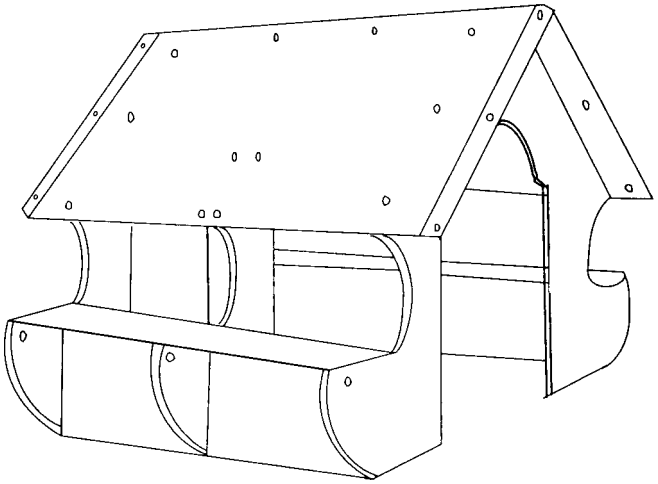

Figure 10–21. Playhouse.

e. *Maintenance Level.* The level of maintenance required for this play equipment is low.

10-24. Ring Trek.

A ring trek is an upper body event that consists of a series of rings suspended from a horizontal support (fig 10–22). To use the equipment, the child hangs from the rings supported by the hands and travels hand-to-hand across the series of rings. This play event may be provided as freestanding equipment or be attached to a composite structure.

a. Recommended Ages. Ring treks are recommended for children ages 5 to 12 years.

b. Safety Guidelines. Takeoff/landing structures for the play event will be provided at a maximum height of 450 mm (18 inches).

c. Use *Zone.* A minimum 2400 mm (96-inch) use zone will be provided from all sides of the equipment.

d. Adaptations for Children With Disabilities. This activity is not readily accessible to children with mobility limitations because of strength and recovery requirements. Children with visual limitations may need assistance in recovery and dismounting.

e. Maintenance Level. The level of maintenance required for this play equipment is moderate.

10-25. Sand Table.

A sand table is a raised, shallow tray that maybe filled with sand for manipulative play (fig 10–23). It may be used from a standing or sitting position. Sand tables may be provided as freestanding equipment or be attached to a composite structure.

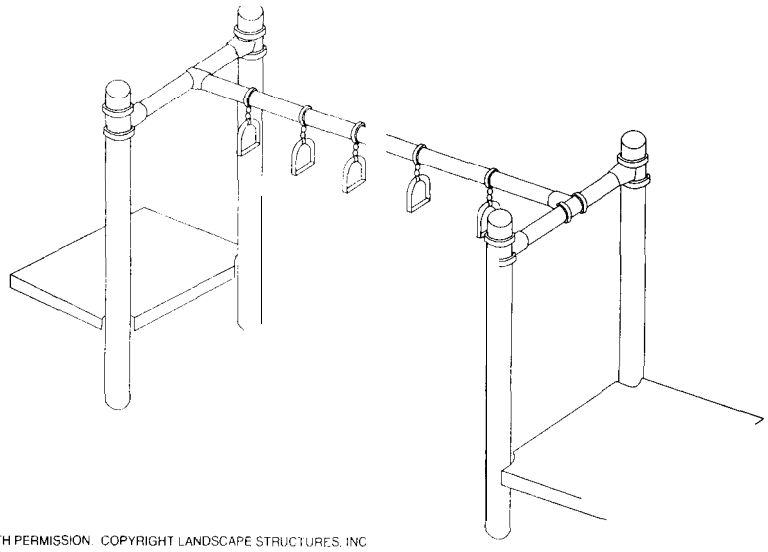

Figure 10-22. Ring Trek.

a. Recommended Ages. Sand tables are recommended for children ages 12 months to 9 years.

b. Safety Guidelines. A hinged table cover will not be provided. Hinged designs may fall onto a child's head, neck, fingers, or other body parts, causing injury or death.

c. Use Zone. A minimum 1800 mm (72-inch) use zone will be provided from all sides of the equipment.

d. Adaptations for Children With Disabilities.

(1) *Ages to 12 Years.* For wheelchair use, the playing surface should not be greater than 750 to 850 mm (30 to 34 inches) high, with a forward reach and side reach of 500 to 900 mm (20 to 36 inches) (fig 10–24). A clear ground space 900 mm by 1400 mm (36 inches by 55 inches) should be provided for a wheelchair. A minimum clear knee space of 600 mm (24 inches) deep and 750 mm (30 inches) wide should be provided.

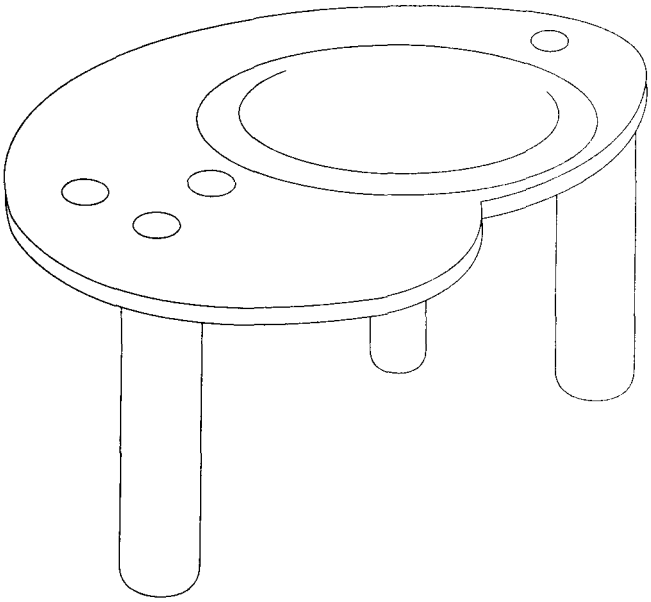

Figure 10-23. Sand Table

(2) *Ages 18 Months to 5 Years.* A playing surface at a height of 550 mm (22 inches) should be provided for side reach. This height also permits young children to reach the equipment from a standing position.

e. Maintenance Level. The level of maintenance required for this play equipment is high.

10-26. Slide.

A slide is a gently sloped plastic or metal surface that serves as an equipment egress from an elevated platform (fig 10–25). Slides that are attached to composite structures are preferred. Freestanding slides may be provided.

a. Recommended Ages. Slides are recommended for children ages 2 to 12 years. More challenging slides, such as curved or tunnel slides, are recommended for children ages 3 to 12 years. Roller slides are not recommended.

b. Safety Guidelines.

(1) *Metal Slides.* Metal slides should be oriented in a northerly direction.

(2) *Clear Sight Lines.* Clear sight lines will be provided from the top to the bottom of the slide.

(3) *Entanglement.* Slides constructed with a smooth, continuous sliding surface with no gaps or spaces that may cause entanglement should be selected.

(4) *Maximum Height of Slide Entrance.* For 2-year-olds, slides with a maximum slide entrance height of 900 mm (36 inches) should be selected. For

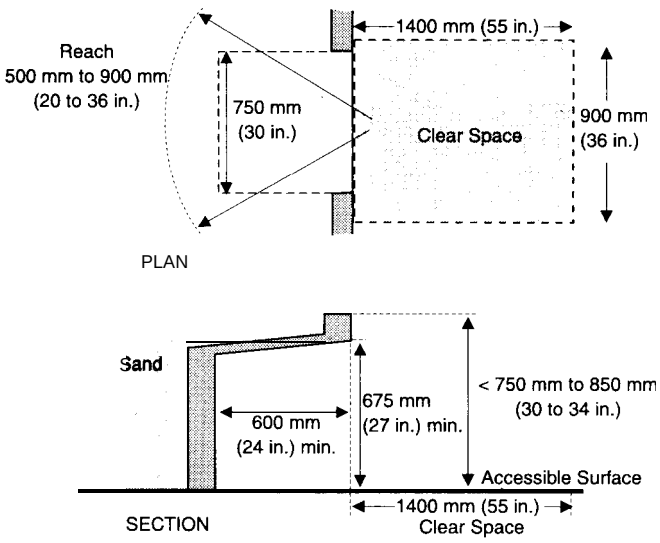

Figure 10-24. Accessible Sand Table

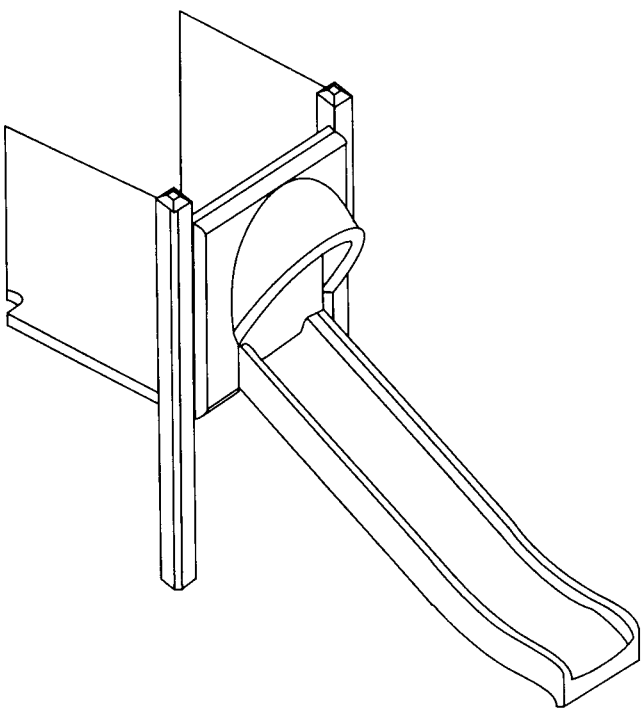

Figure 10-25. Slide

children ages 2 to 5,years, slides with a maximum slide entrance height of 1200 mm (48 inches) should be selected. For children ages 5 to 12 years, a maximum slide entrance height of 1400 mm (56 inches) should be provided,

(5) *Protective Barriers.* If the slide chute is not as wide as the connecting platform, protective barriers will be provided to enclose the platform at both sides of the slide chute.

(6) Shale *Chute Sidewalls.* For slides with circular or semicircular cress-sections, verification should be obtained from the slide manufacturer that the equipment meets the requirements of ASTM F 1487 for minimum vertical sidewall height.

(7) *Lateral Discharge.* For all slides with a curved cross-section, verification should be obtained from the manufacturer that the slide design minimizes the likelihood of lateral discharge.

c. Use Zone. The slide use zone consists of three parts: the area around slide entrance steps or platform; the area to each side of the slide bed; and the area in front of the slide exit (fig 10–26).

(1) *Slide Entry Steps and Platforms.* For children ages 2 through 12 years, a minimum 2400 mm (96-inch) use zone will be provided from all sides of the steps or platform.

(2) *Slide Bed.* A minimum 1800 mm (72-inch) use zone will be provided on each side of the slide bed.

(3) *Slide Exit.* The length of the use zone in front of the slide exit will equal the height of the highest point of the sliding surface plus 1200 mm (48 inches) (fig 10-26). A minimum use zone length of 1800 mm (72 inches) and a maximum length of 4.3 m (14 feet) measured from the point where the slide slope decreases to less than 5° from the horizontal will be provided. If the point where the slope of the slide decreases to less than 5° cannot be determined, the use zone should be measured from the end of the slide exit.

d. Adaptations for Children With Disabilities. When attached to a composite structure, at least one slide should be accessible via a transfer point or ramp. Upper body strength is required to maintain a sitting posture. Slides may be usable by children who walk with assistive devices. The 100 mm (4-inch) slide sidewall makes transferring from a slide to a wheelchair difficult.

e. Maintenance Level. The level of maintenance required for this play equipment is moderate.

10-27. Spring Rocking Equipment.

Spring rocking equipment is a freestanding play event that consists of a seat attached to a spring (fig 10–27). The seat is often designed as a seesaw, animal, or vehicle. This equipment allows young children to experience motion and movement.

a. Recommended Ages. Spring rocking equipment is recommended for children ages 2 to 5 years. Rocking or springing equipment intended for standing will not be provided.

b. Safety Guidelines. The attachment area of heavy duty coil springs to the body of rocking equipment is exempt from pinch, crush, and shear point requirements.

c. Use Zone. A minimum 1800 mm (72-inch) use zone will be provided from all directions of' the equipment. When two rocking structures have a

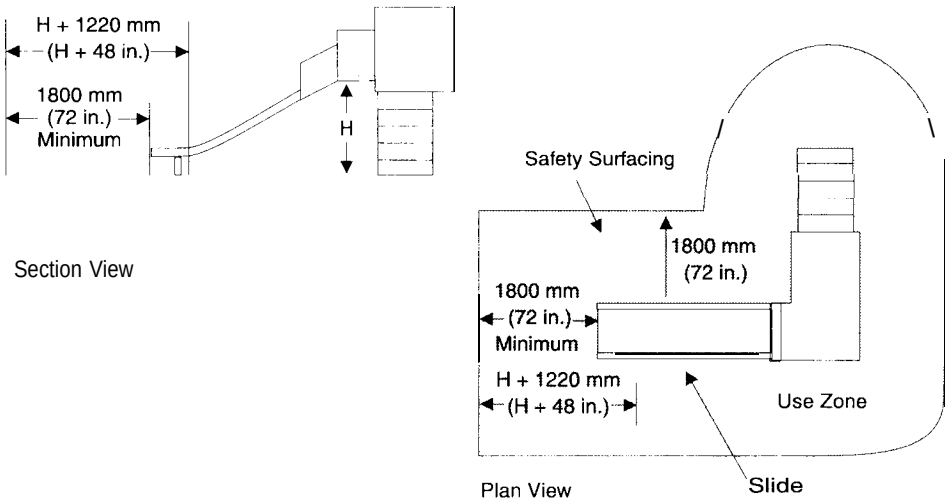

Figure 10–26. Slide Use Zone.

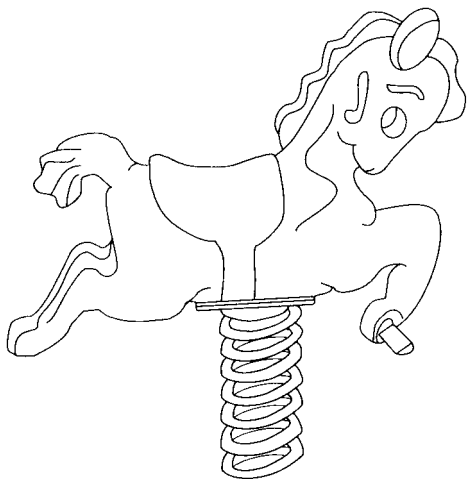

ADAPTED WITH PERMISSION COPYRIGHT LANDSCAPE STRUCTURES INC

Figure 10–27. Spring Rocking Equipment

seat height of 750 mm (30 inches) or less and are located adjacent to each other, the rocking equipment use zones may overlap.

d. Adaptations for Children With Disabilities. Seats with back support and seat belts may be provided for children who have difficulty maintaining a sitting posture.

e. Maintenance Level. The level of maintenance required for this play equipment is moderate.

10–28. Stationary Bridge.

A stationary bridge may be designed as freestanding equipment or as a play event attached to a composite structure. It is a platform that connects two areas of land or two composite structure platforms (fig 10–28)

a. Recommended Ages. The stationary bridge is recommended for children of all ages.

b. Safety Guidelines.

(1) *Maximum height to bridge surface.* For children 12 months and under, a fully enclosed bridge with no potential for entrapment or falls to the surface will be provided. For children 12 months to 2 years, the bridge will be located at a maximum height of 900 mm (36 inches) to the bridge surface, For children ages 2 to 5 years, the bridge will be located at a maximum 1200 mm (48-inch) height to the bridge surface. For children 5 to 12 years, bridges with a maximum height of 1400 mm (56 inches) will be selected.

(2) *Bridge Surface.* A surface design that does not accumulate water or debris will be selected,

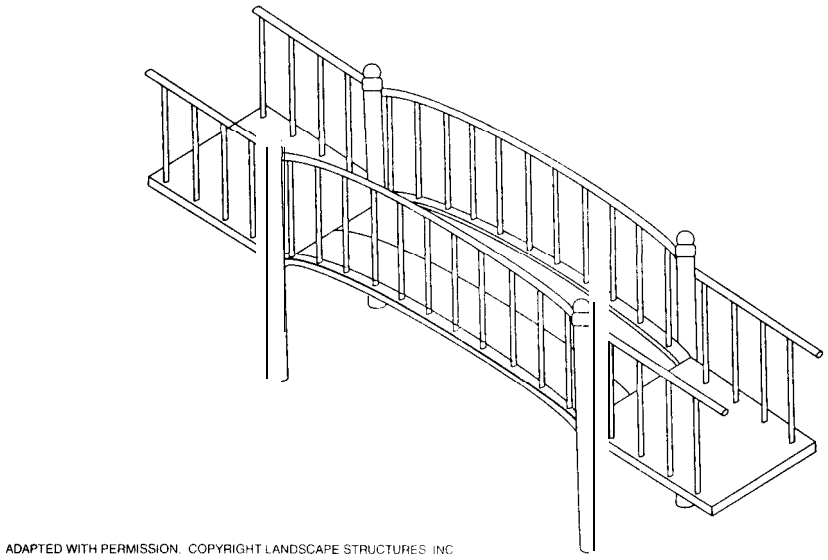

Figure 10–28. Stationary Bridge.

Surface materials that will not cut, scratch, or burn when children crawl or slide on the surface will be selected.

c. Use Zone. For infant to 2 years, a minimum 1800 mm (72-inch) use zone will be provided from all sides of the equipment. For children ages 2 through 12 years, a minimum 2400 mm (96-inch) use zone will be provided from all sides of the equipment.

d. Adaptations for Children With Disabilities. The bridge may he designed to accommodate wheelchairs. Handrails and landings on accessible bridges should meet guidelines for ramps for wheelchair use. A minimum width of *900* mm (36 inches) will be provided for accessible bridges.

e. Maintenance Level. The level of maintenance required for this play equipment is low.

10-29. Swing—to-Fro (Single Axis) Swing.

A to-fro swing frame includes seats that are suspended from chains or cables (fig 10–29). The swing seats move front-to-back along an arc in a single vertical plane. To-fro swings will be installed as freestanding equipment. The swings will not be attached to a composite structure.

a. Recommended Ages. Swings are recoin mended for children ages 6 months to 12 years.

b. Safety Guidelines.

(1) *Maximum Height of the Swing Crossbeam.* For children ages 6 months to 3 years, a swing crossbeam with a maximum height of 2100 mm (84 inches) will be provided. For children 3 through 12 years, a maximum crossbeam height of 2400 mm (96 inches) will be provided.

(2) *Location.* To-fro swings should be located at the edge of the play area, away from other play structures and circulation areas.

(3) *Number and Type of Swing Seats Per Bay.* Tot swings and belt swings will be hung from separate swing supports or in separate swing bay sections.

(4) *Swing Seats.* Rubber belt-type swing seats and tot seats will be provided. Tot seats that provide 360° support and are free from head and neck entrapments will be selected.

(5) *Swing Seat Height.* The minimum vertical height of swing seats will be measured from the underside of the occupied seat to the safety surface. For tot swing seats, the seats will be located at a minimum vertical height of 600 mm (24 inches). For 2 to 5-year-olds, a minimum vertical swing seat

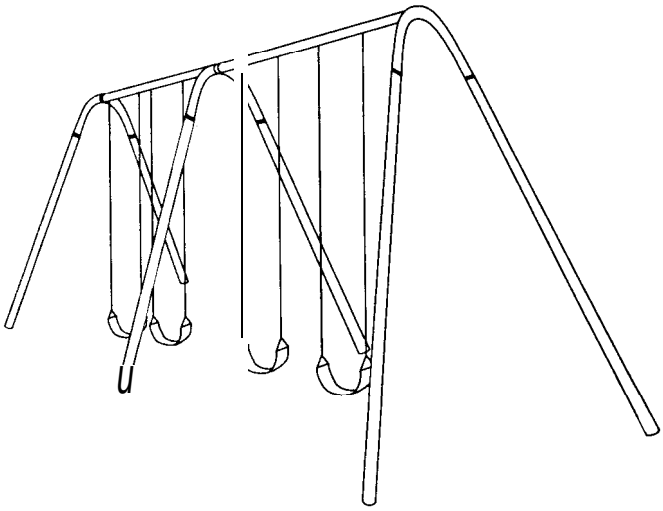

Figure 10–29. To-Fro Swing

height of 300 to 450 mm (12 to 18 inches) will be provided. For 5- to 12-year-olds, swing seats will be located at a minimum vertical height of 450 mm (18 inches).

(6) *Chairs.* PVC-coated chains may reduce pinching and may be selected at the designer's option.

c. Use Zone. A use zone equal to two times the height of the swing pivot point will be provided. The use zone extends both in front of and to the rear of the suspending beam for a width at least as wide as the beam (fig 10–30). Also, a 1800 mm (72-inch) use zone will be provided on both sides of the swing support structure. When two swings are located adjacent to each other, the swings may share the 1800 mm (72-inch) use zone at the side.

d. Adaptations for Children With Disabilities. Swinging requires upper body strength and the ability to maintain a sitting position.

(1) *Swing Seats.* Swinging platforms for wheelchairs ("wheelchair swings") or hard seats should not be provided because of potential impact hazards. A commercially available hammock-type swing seat with seat belts may be attached to a standard swing and used to provide back support.

(2) *Tactile Warning.* As a tactile warning, a distinct difference in texture between the swing use zone and the surrounding area is recommended.

(3) *Swing Use Zone.* Accessibility guidelines for the swing use zone are illustrated in figure 10–31. Access will be provided for transferring onto the swing and for pushing. One swing in each grouping of swings will have a use zone covered with accessible safety surfacing. A firm, stable, slip-resistant, and resilient surface a minimum 1500 mm (60 inches) wide will be provided under the full arch of the swing. This provides two turnaround spaces, with a minimum diameter of 1500 mm (60 inches), along the route of the swing. One turnaround space will be provided for transferring onto the swing seat. The second turnaround space will be provided for pushing the swing. The surface will extend 100 mm (4 inches) beyond the maximum extension of the swing arch. A 750 mm by 1200 mm (30-inch by 48-inch) parking space will be provided for a wheelchair outside of the swing seat use zone.

e. *Maintenance Level.* The level of maintenance required for this play equipment is high.

10-30. Swing—Rotating (Multiple Axis or Tire) Swing.

A rotating swing frame includes seats that are suspended from chains or cables (fig 10–32). The swing seat moves about in more than one plane and spins around on its axis. Rotating swings will be installed as freestanding equipment. Rotating swings will not be attached to a composite structure.

a. *Recommended Ages.* Rotating swings are recommended for children ages 3 to 12 years.

b. Safety Guidelines.

(1) Maximum Crossbeam Height. A maximum swing crossbeam height of 2400 mm (96 inches) will be provided.

(2) *Location.* Rotating swings should be located at the edge of the play area, away from other play structures and circulation areas.

(3) *Number of Swings Per Bay.* Equipment use zones for rotating swings will not overlap. Rotating swings and to-fro swings will not be hung from the same support structure.

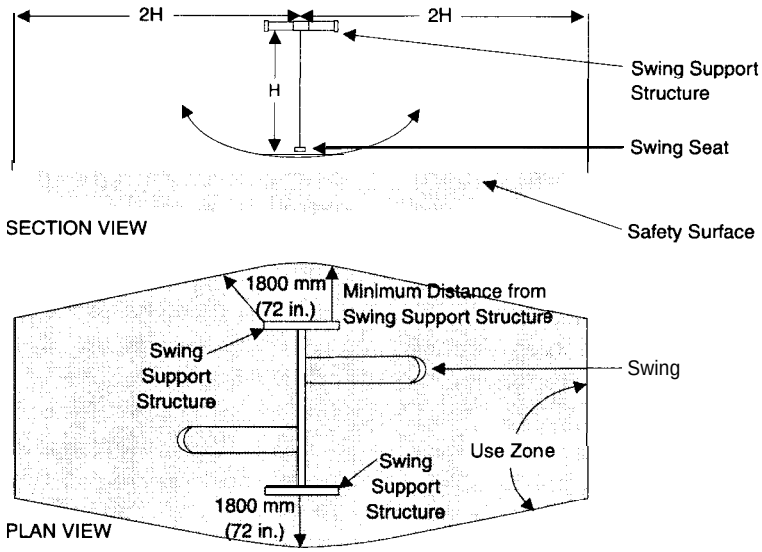

Figure 10–30. Swing Use Zone

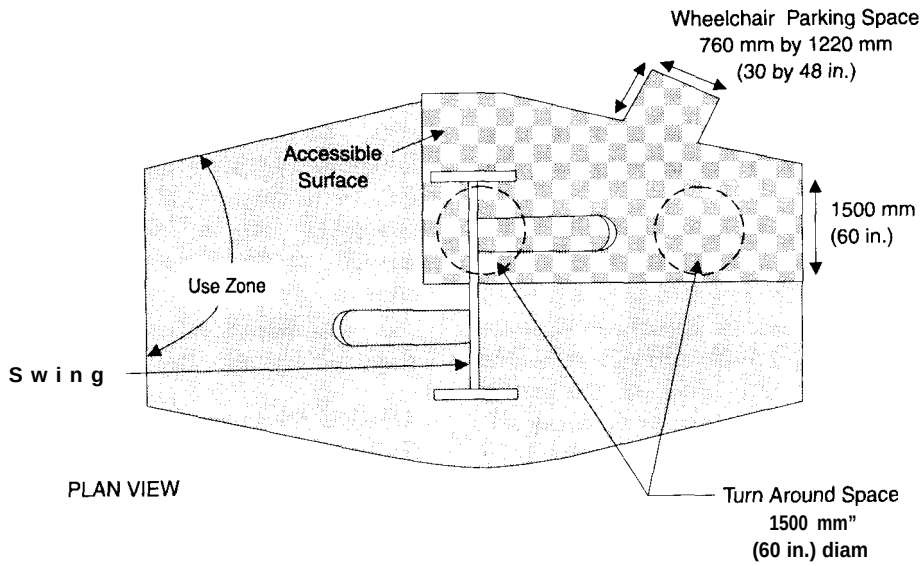

Figure 10-31. To-Fro Swing Use Zone Accessibility Guidelines

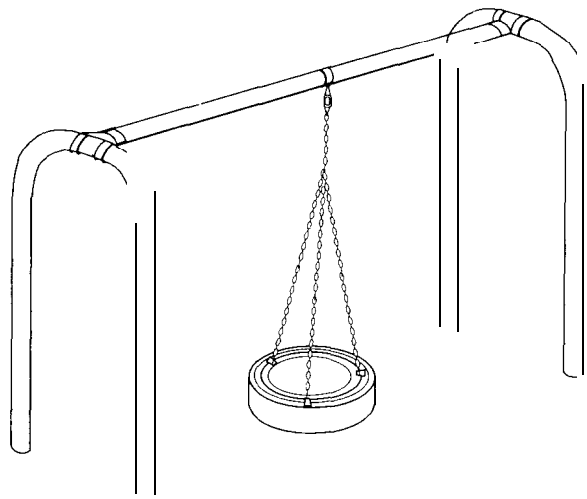

ADAPTED WITH PERMISSION. COPYRIGHT LANDSCAPE STRUCTURES, INC

Figure 10-42 Rotating Swing.

(4) *Swing Seats.* Rotationally molded swing seats with no openings should be provided, to avoid collecting water and prevent insect nesting, Smoothly finished seats with blunt or rounded edges should be provided. New or recycled automobile tires should not be used as swing seats.

(5) *Chains.* PVC-coated chains may reduce pinching and may be selected at the designer's option.

c. Use Zone. A use zone that equals the vertical distance between the pivot point and the top of the swing seat plus 1800 mm (72 inches) will be provided (fig 10–33) This use zone extends in all directions when measured from the swing seat. A minimum 1800 mm (72 inch) use zone extending in all directions from the swing support structure will be provided. When two rotating swings are located adjacent to each other, the swing support structures may share the 1800 mm (72-inch) use zone at the side.

d. Adaptations for Children With Disabilities,

(1) *Swing Seats.* Webbing or rubber may be attached to the bottom of the swing to help support children who have difficulty in sitting.

(2) *Tactile Warning,* As a tactile warning, a distinct difference in texture between the swing use zone and the surrounding area is recommended,

(3) *Rotating Swing Use Zone.* One swing in each group of swings will be accessible. An accessible path of travel up to the swing for transferring

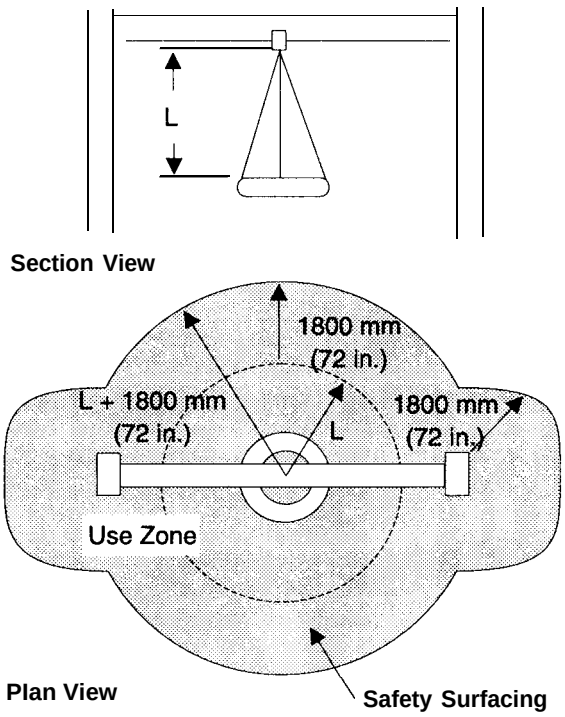

Figure 10-33. Rotating Swing llse Zone.

onto it and for pushing will be provided. A continuous, firm, stable, and slip-resistant, safety surface will be provided throughout the swing use zone.

e. Maintenance Level. The level of maintenance required for this play equipment is high.

10-31. Track Ride.

A track ride is an upper body event that consists of a handgrip attached to a vertical support with ball bearings or other moving connectors (fig 10–34). To use the equipment, the child's weight is supported by the hands and arms. This weight, along with the motion of the child's body, propels the track ride across the vertical support. The play event may be provided as freestanding equipment or may be attached to a composite structure.

a. Recommended Ages. Track rides are recommended for children ages 5 to 12 years. Track rides are not recommended for children under 5 years.

b. Safety Guidelines. The track ride slope should meet manufacturers' recommendations.

c. Use *Zone.* A minimum 2400 mm (96-inch) use zone from all sides of the equipment will be provided.

d. Adaptations for Children With Disabilities. This activity is not readily accessible to children with mobility limitations because of strength and recovery requirements. Children with visual limitations may need assistance in recovery and dismounting.

e. Maintenance Level. The level of maintenance required for this play equipment is high.

10-32. Tunnel.

A tunnel is an enclosed passage designed to be crawled through by a child (fig 10–35). Tunnels may be freestanding equipment or may be attached to a composite structure.

a. Recommended Ages. Tunnels are recommended for children ages 6 months to 12 years.

b. Safety Guidelines. For children ages 6 months to 12 months, the tunnel should be located at safety surfacing level with no potential fall. For children ages 12 months to 2 years, the tunnel may be attached to platforms with a maximum height of 900 mm (36 inches). For children 2 to 5 years, the tunnel may be attached to platforms with a maximum height of 1200 mm (48 inches). For children 5 to 12 years, the maximum height of attached platforms will be 1400 mm (56 inches).

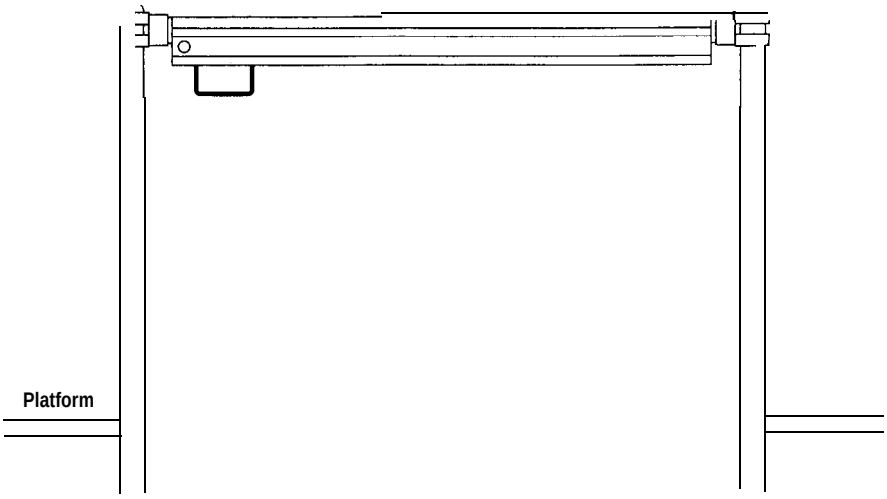

Figure 10-34. Track Ride.

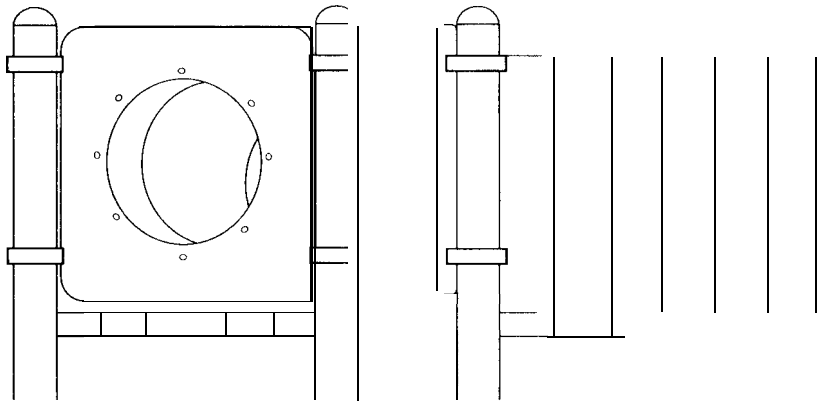

ADAPTED WITH PERMISSION. COPYRIGHT LANDSCAPE STRUCTURES, INC

Figure 10-35. Tunnel.

c. Use Zone. For infant to 2 years, a minimum 1800 mm (72-inch) use zone will be provided from all sides of the equipment. For children ages 2 through 12 years, a minimum 2400 mm (96-inch) use zone will be provided from all sides of the equipment.

d. Adaptations for Children With Disabilities. Tunnels provide crawling experiences for children with limited mobility at ground level or as part of a composite structure.

e. Maintenance Level. The level of maintenance required for this play equipment is moderate.

10-33. Play Events Which are not Appropriate.

Play events which are not appropriate for unsupervised children's outdoor play areas are listed in table 10–2.

Table 10-2. Inappropriate Play Events for Unsupervised Play Areas.

Inappropriate Play Events
Animal figure swings
Chain walks
Chain or tire climbers
Fulcrum seesaws
Log roles
May poles
Merry-go-rounds
Multiple occupancy swings other than tire swings
Rope swings
Rotating equipment
Swinging exercise rings
Trapeze bars
Whirls

10-34. Composite Structure.

Specific design guidelines apply when two or more play events are combined to form a composite structure.

a. Recommended Ages. Composite structures are recommended for children ages 12 months to 12 years.

b. Safety Guidelines.

(1) *Applicable Safety Guidelines,* Composite structures will comply with general safety guidelines for children's outdoor play areas. In addition, safety guidelines that apply to all manufactured equipment and guidelines for individual play events that comprise the structure should be followed. Play events that are appropriate for the intended age group will be selected.

(2) *Maximum Platform Height.* For children ages 12 months to 2 years, a maximum platform height of 900 mm (36 inches) will be provided. For 2- to 5-year-olds, a maximum platform height of 1200 mm (48 inches) will be provided. For 5- to 12-year-olds, the platform will have a maximum height of 1400 mm (56 inches).

c. Use Zone. A use zone for composite equipment equal to the use zones recommended for all individual play events that comprise the structure should be provided. The designers will evaluate the design of modular composite play equipment prior to purchase and installation. Guidance will be obtained from the installation safety manager and the manufacturer.

(1) *Side-by-Side Play Events.* Hazards created by conflicts in circulation and/or use patterns should be eliminated. Two play events will not extend from the same side of a composite play structure to create side-by-side play events (fig 10–36).

(2) *Recommended Layouts.* Recommended composite structure layouts for children ages 12 to 24 months, 2 to 5 years, and 5 to 12 years are provided (fig 10–37 through 10–39). These layouts are provided because manufactured play equipment catalogs include layouts that do not meet play program requirements of the installation. Catalogue layouts may also include play events that are not recommended for children's outdoor play areas. It is recommended that the designer use the recommended composite structure layouts to develop bid documents.

d. Adaptations for Children With Disabilities. Guidelines for accessible routes, ramps for wheelchair access, transfer points, wheelchair-accessible platforms, and accessible stepped platforms will be followed when designing composite structures. Equipment entrances and exits may be marked with a change in texture on the rail and/or floor as a tactile warning. Play events with high potential for use by children with disabilities should be selected. These play events will be similar to the nonaccessible play events. An accessible path of travel will be provided to accessible composite structure play events that are located on the ground plane.

(1) *Small Play Structures.* Small play structures with less than 12 elevated play events are not required to have a ramp. A transfer system that provides access to a minimum of one-half of the elevated play events will be provided. Where a sliding experience is included, the transfer system will provide access to at least one slide.

(2) *Large Play Structures.* In large play structures with 12 or more elevated play events, a ramp will be provided to access a minimum of one-half of the play events. In addition, a transfer system will be provided to access a minimum of one-half of the play events. Some play events may be accessed both by ramp and by the transfer system. When a sliding experience is provided, at least one slide will be accessible by ramp. Accessible play events will be similar to inaccessible play events. The designer will choose those play events which will be accessed by a ramp and/or a transfer point.

e. Maintenance Level. The level of maintenance required for this play equipment is moderate.

10-35. Play Events Not Included in the Manual.

Manufacturers are continuously developing new products and play events. The designer should first determine if these play events meet the installation play area program requirements. If so, the designer should consult the U.S. Consumer Product Safety Commission's *Handbook for Public Playground Safety* and ASTM F 1487 to determine the child safety requirements for this event.

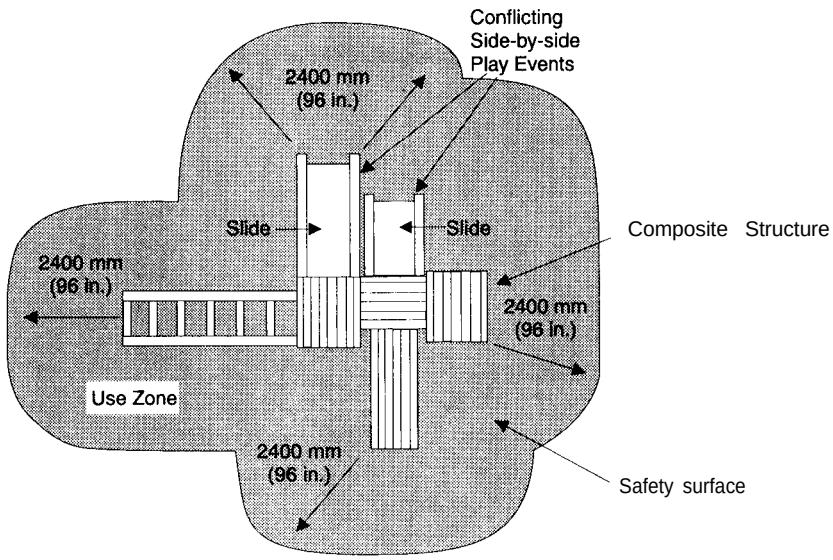

Figure 10-36. Composite Play Equipment With Side-by-Side Events

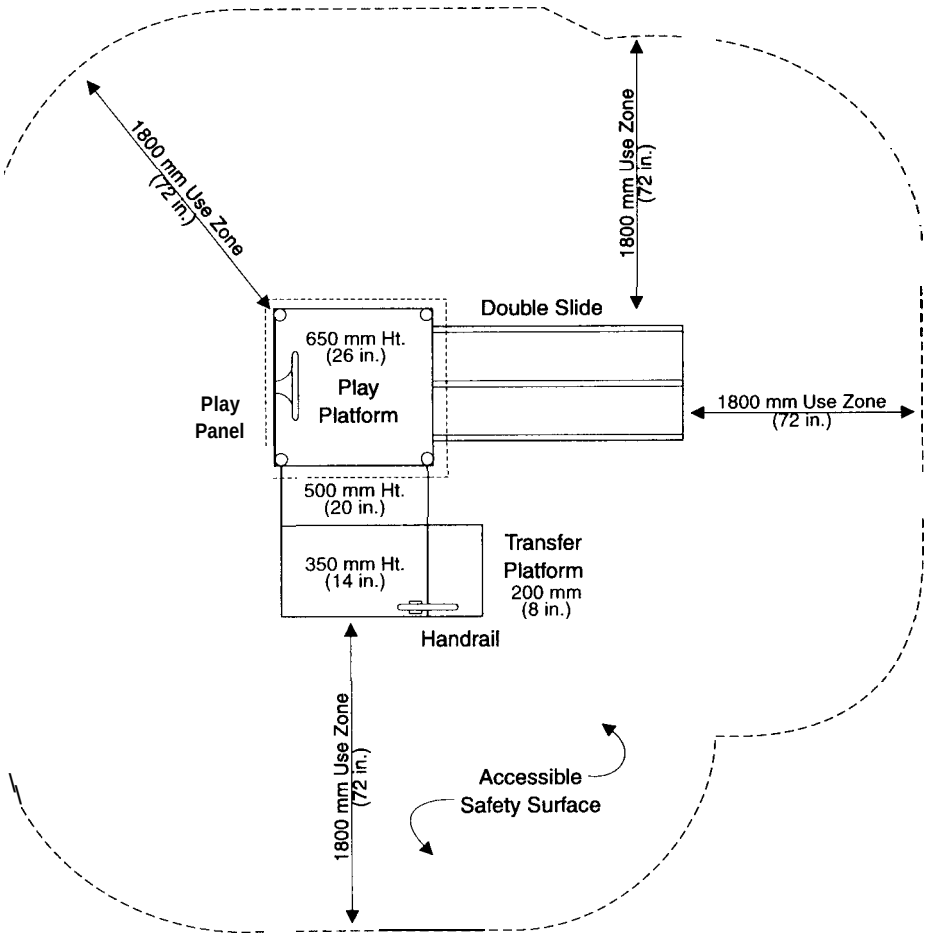

ADAPTED WITH PERMISSION. COPYRIGHT LANDSCAPE STRUCTURES, INC.

Figure 10-37. Composite Structure (12 to 24 Months).

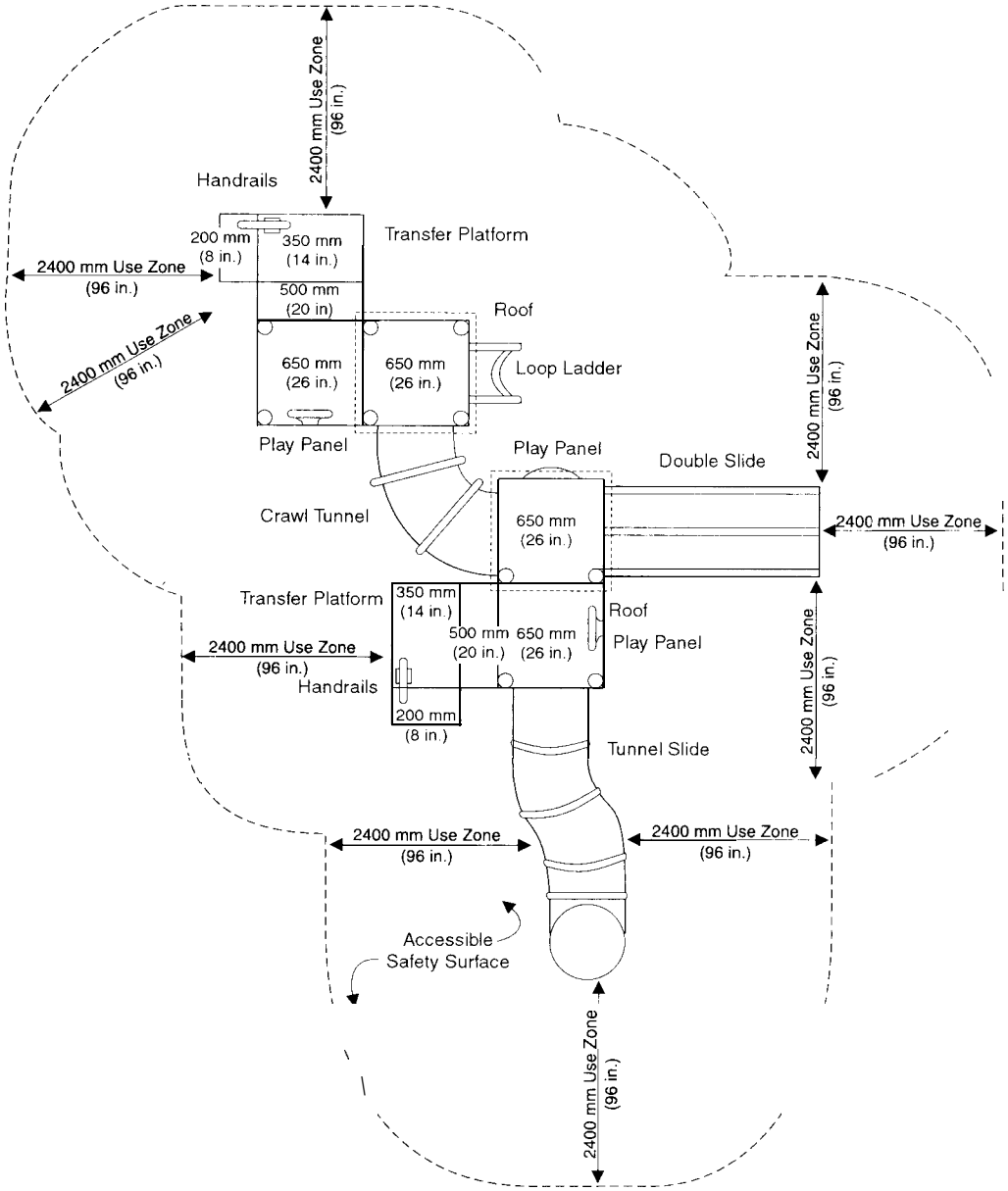

ADAPTED WITH PERMISSION COPYRIGHT LANDSCAPE STRUCTURES, INC

Figure 10–38. Composite Structure (2 to 5 Years).

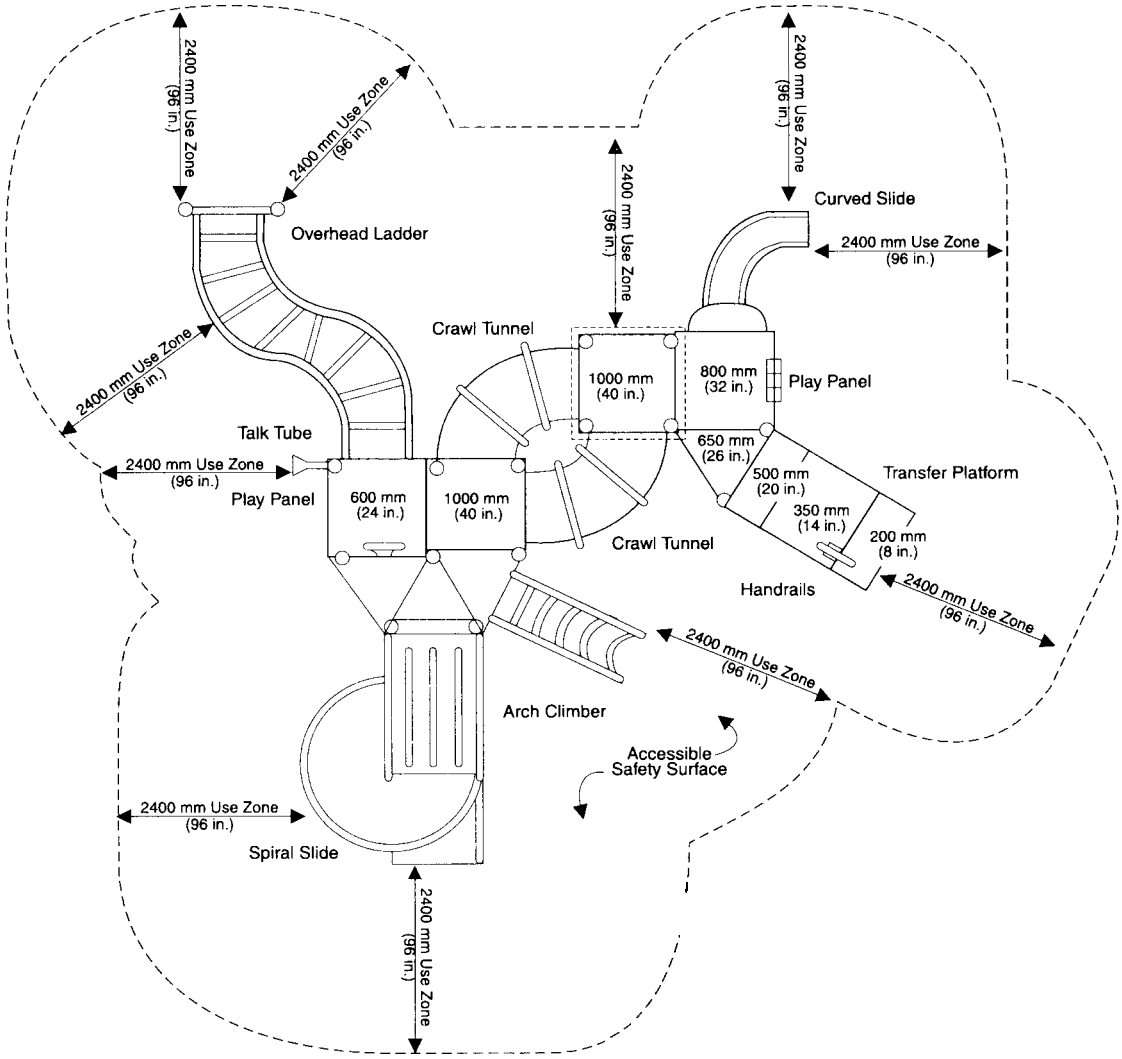

Figure 10-39. Composite Structure (5 to 12 Years)

CHAPTER 11

PLAY AREA SURFACING

11-1. Introduction.

A variety of surfaces should be provided in play areas. Both soft and hard play surfaces are needed to support different types of play activity. Hard surfaces and safety surfaces are discussed in this chapter. Safety surfacing is mandatory throughout the use zones of all manufactured play equipment. Safety surfacing includes synthetic surfacing and loose-fill surfacing.

11-2. Hard Surfaces.

Hard surfaces include soil, concrete, asphalt, artificial grass, and decomposed granite. These surfaces support a variety of activities for all age groups, including: circulation, wheeled toy play, chase games, site exploration, and ball play. Hard surfaces are accessible to individuals with disabilities.

a. Design Considerations.

(1) *Concrete.* Concrete should be poured on a prepared base that is clean and free of debris. Color admixtures or surface paint may be added for interest and to provide opportunities for organized games and dramatic play.

(2) *Asphalt.* Asphalt should be contained with a concrete or timber edge to eliminate chipping and cracking around edges.

(3) *Pavers on Concrete.* The accessibility of this surface depends upon the surface texture of the pavers and the profile of the mortared joints. This material can provide a stable and easily maintained surface for both foot and vehicular traffic.

(4) *Crushed Stone and Decomposed Granite.* When compacted, this material is a good all-weather, accessible surface for picnic areas or pathways. Designers should be aware that maintenance is essential to continued accessibility.

(5) *Wood Decking.* This surfacing material is susceptible to deterioration and wear. It requires moderately high amounts of maintenance. Adequate drainage and ventilation of wood decking is necessary to avoid rot and to prevent the growth of moss. Wood decking can be easily painted to provide interest and to delineate areas.

(6) *Pavers on Sand.* This hard surface material is less expensive than pavers on concrete, and is permeable to allow for drainage. Similar to pavers on concrete, the accessibility of this surface depends on the surface texture of the pavers. This surfacing material is subject to erosion, and to heaving during freeze/thaw cycles. Displaced sand can present a slip hazard.

(7) *Artificial Grass.* Artificial grass *is* an expensive material that is suitable for general play and game areas. It should be laid on a hard surface.

(8) *Soil.* Untreated soil is variable. Soil maybe acceptable for some situations if maintained to prevent erosion and eliminate poor drainage conditions. Soil condition changes significantly with precipitation, temperature, erosion, and wear.

(9) *Drainage.* Positive drainage should be provided. Flat grades or negative drainage should be avoided.

b. Recommended Ages. Hard surfaces are used by all ages.

c. Safety Guidelines.

(1) *Prohibited Use.* Hard surfaces will not be used in play equipment use zones or crawl areas for infants.

(2) *Slip Hazards.* Concrete finishes with a light texture, such as a broom finish, should be provided to reduce slipping when wet. Loose material, such as sand, gravel, and wood products, create slip hazards on hard surfaces. Where loose-fill materials are adjacent to hard surfaces, the level of loose-fill material should be installed 75 mm (3 inches) below the level of the hard surface. Loose-fill materials should be contained with barriers. Designers should consider that moss and mold on concrete and asphalt are a slip hazard and a maintenance issue.

(3) *Trip Hazards and Dropoffs.* Changes greater than 6 mm (l/4-inch) between levels on pathways should be avoided.

(4) *Drainage Grates and Utility Boxes.* Drainage grates and utility boxes will be locked and located outside of the play area where possible.

d. Accessibility.

(1) *Hard Surfacing Options. All* hard surfaces and primary pathways will be firm, stable, and slip-resistant. In the order of decreasing accessibility, the following hard surfacing choices include: concrete; asphalt; pavers on concrete; crushed stone or decomposed granite; wood decking; pavers on sand; artificial grass; and untreated soil,

(2) *Asphalt.* Asphalt will not be used in very hot, sunny locations because it may become soft and cause difficulty for people using wheelchairs. Asphalt used in these locations may also be a safety hazard when hot.

e. Maintenance. The maintenance level is low for most types of hard surfaces.

f. Cost. The initial cost is moderate. The cost of maintenance is low.

11-3. Safety Surfaces.

Adequate safety surfacing throughout play equipment use zones is an essential safety requirement. Falls from play equipment represent over 70% of all playground equipment-related injuries treated in hospital emergency rooms. Without appropriate safety surfacing, these falls may result in permanent head injury or death.

a. Types of Safety Surfacing. A number of safety surfacing materials are available. Each type of safety surfacing has unique advantages and disadvantages. The two major types of safety surfaces are synthetic surfacing and loose-fill surfacing. Synthetic surfacing includes tiles that are formed in the factory, or surfacing that is poured in place onsite. Loose-fill surfacing includes organic and inorganic materials, such as sand, gravel, chopped tire, and wood products.

b. Impact Attenuation Criteria. Standards for impact attenuation have been developed with the goal of reducing severe head injury or death from falls from manufactured play equipment. Safety surfaces that meet the requirements of ASTM F 1292 will be provided throughout the play equipment use zone. ASTM F 1292 states that the surface must yield both a peak deceleration of no more than 200 g's and a Head Injury Criteria (HIC) value of no more than 1,000 for a headfirst fall from the highest accessible height of the play equipment. G-force measures the peak deceleration of the head during impact. HIC measures the duration of the impact during its most sever phase.

c. Critical Height of Safety Surfacing Materials. The performance of safety surfacing is measured from potential fall heights. The critical height of a surfacing material is the maximum height at which a headfirst fall from equipment onto the safety surface meets the ASTM F 1292 standard. For instance, a particular surfacing material may not meet test criteria for a fall from 2400 mm (96 inches), but will meet criteria for a 1800 mm (72-inch) fall. It can then be said that this surfacing material has a 1800 mm (72-inch) critical height. The critical height of safety surfacing material used in children's play areas will equal or exceed the highest accessible height of the equipment provided. The highest accessible height of various types of play equipment is measured from different points. Table 11–1 describes how the highest accessible height is determined for manufactured play equipment.

d. Manufactured Safety Surfacing. Testing data should be obtained from manufacturers of synthetic surfaces, chopped tire surfaces, or wood products manufactured as safety surfacing to verify that the surface meets the requirements of ASTM F 1292 for a headfirst fall from the highest accessible equipment height to be provided.

e. Loose-Fill Surfacing. Loose-fill materials are often not manufactured specifically as safety surfacing. Therefore, test data is often not available from suppliers. In 1993, the U.S. Army Corps of Engineers commissioned a testing program to develop recommended material depths for loose-fill surfaces. Materials tested include sand, pea gravel, and bark mulch. To reproduce required impact-attenuating performance, the materials must meet the requirements in this chapter; the maximum accessible height of play equipment must not exceed 2400 mm (96 inches); and the surface must receive regular maintenance to maintain material depth. A 25 mm (l-inch) difference in material depth may dramatically increase injury potential. Table 11–2 describes the recommended installed material depth for loose-fill surfacing.

Table 11-1. Highest Accessible Equipment Height,

Play Equipment	Highest Accessible Height
Composite equipment	Measure from the top edge of the protective barrier.
Infant crawl area	Measure from maximum height of 600 mm (24 inches).
Playhouse, nonclimbable	Measure from the maximum height of the highest surface which is a minimum 50 mm (2 inches) wide and has a slope of 30° or less.
Spring rocker	Measure from the seat.
Stationary equipment, climbable	Measure from the maximum height of the structure.
Stationary equipment, nonclimbable	Measure from maximum height of highest surface which is a minimum 50 mm (2 inches) wide and has a slope of 30° or less.
Swing	Measure from the height of the pivot point.

Table 11–2. Recommended Installed Depths for Loose-Fill Safety Surfacing.

Material	Recommended Installed Depth
Sand	450 mm (18 inches)
Gravel	300 mm (12 inches)
Wood products	300 mm (12 inches)
Chopped tire	150 mm (6 inches)

11-4. Synthetic Surfacing.

Synthetic surfacing, such as synthetic tile and poured-in-place surfacing, is available in a variety of thicknesses to provide protection from falls from varying heights. Its major disadvantage is high initial cost. Its major advantages are low maintenance and consistent impact-attenuating performance.

a. Design Considerations.

(1) *Poured-In-Place Surfacing.* Poured-in-place surfacing is a relatively new product. It is made from a combination of chopped or shredded rubber and a flexible plastic binder that is mixed and poured on-site. The installation process is similar to the process used to install asphalt. Poured-in-place surfacing consists of a poured-in-place substrate layer, covered by a durable wear surface. The wear surface may be a poured-in-place, manufactured turf, or rubber sheet goods material.

(a) Advantages. Poured-in-place surfacing is suitable for any application or climate zone. The surfacing can be installed in any thickness. The material thickness can be varied where necessary to accommodate changing impact attenuation requirements under equipment of different heights. The material's edges can be shaped in freeform or straight lines, making it adaptable to many situations. Color patterns can be created with the surface material. Since the surface is composed of new rather than recycled rubber, the surface may be more resistant to fading. Poured-in-place surfacing is less expensive than synthetic tiles for application in large areas.

(b) Disadvantages. Poured-in-place surfaces are more difficult to repair than synthetic tiles. In addition, a qualified, experienced installer is essential to ensure durability and impact attenuation.

(c) Installation Requirements. Poured-in-place surfacing may be installed over asphalt, concrete, or compacted gravel subsurfaces. A geotextile fabric should be installed over the compacted gravel subsurface before installing the surfacing. The poured-in-place substrate is mechanically mixed on site in accordance with the manufacturer's recommendations. The substrate should be installed in one continuous pour. A wear surface should be bonded to the substrate.

(2) *Synthetic Tiles.* Synthetic tiles are factory-molded geometric shapes. The tiles may combine an impact-attenuating substrate and a wear surface or consist of a uniform material that varies in density.

(a) Advantages. Synthetic tiles are recommended for small projects, for projects where a checkerboard pattern is desired, or for remote locations where experienced safety surfacing installers are not available. Individual damaged tiles may be replaced without replacing the entire safety surface.

(b) Disadvantages. For large areas, synthetic tiles may be more expensive than poured-in-place surfaces. When composed of recycled rubber, the surface may be more likely to fade. In addition, tiles may be vulnerable to vandalism.

(c) Installation Requirements. Depending on the manufacturer's recommendations, synthetic tiles may be installed over asphalt, concrete, or compacted gravel. When installed over a compacted gravel subsurface, a geotextile fabric should be installed over the subsurface before installing the tiles. The tiles may be secured by an adhesive or hardware in accordance with the manufacturer's recommendations. Cutouts should be filled with sealant to eliminate voids at play equipment.

(3) *Combination System.* The combination system includes modular substrate units overlaid with a bonded, manufactured turf-type or rubber sheet goods wear surface.

(a) Advantages. Combination systems provide many wear surface options. These wear surfaces may be especially desirable in areas where a nonabrasive surface is needed.

(b) Disadvantages. Combination systems may be less durable than other synthetic surfaces. These surfaces should be selected for areas with low activity levels, or where low use is expected.

(c) Installation Requirements. Depending on the manufacturer's recommendations, combination systems may be installed over asphalt, concrete, or compacted gravel. When installed over a compacted gravel subsurface, a geotextile fabric should be in-

stalled over the subsurface before installing the modular substrate. The substrate may be secured by an adhesive or by hardware in accordance with the manufacturer's recommendations. The wear surface should be bonded to the substrate with adhesive. Cutouts should be filled with sealant to eliminate voids at equipment.

(4) *Additional Selection Considerations.*

(a) Appearance. The synthetic surfacing should look attractive and should complement the appearance of playground equipment.

(b) Rubbery Odor. The material may have an unattractive rubbery odor. It should be determined whether the odor is acceptable.

(c) Slip-Resistance. The surface should be slip-resistant.

(d) Installation. The manufacturer should be contacted to determine the installation requirements of the proposed surface. Temperature and weather conditions may be important factors.

(e) Drainage. Positive drainage should be provided. Some surfaces allow water percolation. The designer should determine drainage requirements for the selected surface.

(f) Maintenance. Maintenance requirements for the safety surface should be determined. Techniques used to repair the surface should be established. It should be determined whether play equipment can be replaced or repaired without replacing the entire surfacing.

(g) *Durability.* The manufacturer's warranty and information about the expected durability of the product should be obtained.

(h) Pests. It should be determined whether pests, such as moles, may be likely to increase maintenance needs and to affect the surface's life span.

b. Recommended Ages. Synthetic safety surfacing may be used by all age groups.

c. Safety Guidelines.

(1) *Impact Attenuation.* Manufacturers will be required to produce testing data verifying that the product meets the requirements of ASTM F 1292 from the height specified by the purchaser. In addition, manufacturers should provide written verification that the installed safety surfacing meets this criteria.

(2) *Hard Spots. Be* aware that the ASTM standards do not require testing for potential hard spots, such as seams and hardware. Some manufacturers may perform additional tests for potential hard spots. Manufacturers should provide product performance information for hard spots.

(3) *Flammability.* Some synthetic safety surfaces may be flammable. The surface's potential for burning should be determined.

(4) *Heat Retention.* Heat retention in darker materials may be a safety concern in hot climates. Light colored surfaces should be used in hot climates.

d. Accessibility. Synthetic surfacing is a fully accessible safety surface. It may be used to create circulation areas or accessible paths of travel within play equipment use zones.

e. Maintenance. The maintenance level is low.

f. Cost. Synthetic safety surfacing has the highest initial cost of any safety surface, but the cost of maintenance is low.

11-5. Organic Loose-Fill Surfacing.

Organic loose-fill surfacing includes wood mulch, bark mulch, and manufactured wood chips. The impact-attenuating ability of these materials depends on the air trapped within and between individual particles. Compared to the performance of other loose-fill materials, the impact-attenuating performance of wood products is less affected by hot, cold, and wet conditions. Although initially inexpensive, the cost of maintenance is high. The material is easy to obtain and install, less abrasive than sand when tracked into buildings, and easier to police for broken glass than sand. These materials are less likely than sand to attract cats and dogs, but are more likely to attract insects and snakes. Local pests and their habitats should be considered prior to selecting this surfacing. Material specifications for wood products are provided in table 11–3.

Table 11-3. Wood Product Material Specifications

Play Equipment	Highest Accessible Height
Bark mulch	Untreated chipped bark with a maximum size of 40 mm (1-1/2 inches) and no twigs, leaves, branches, thorns, dirt, or poisonous plants.
Wood mulch	Untreated chipped tree prunings with a maximum size of 40 mm (1-1/2 inches) and no thorns, dirt, or poisonous plants.
Manufactured wood chips	Particle sizes may vary from 3 mm (1/8-inch) to 12 mm (1/2-inch) thick by 25 mm (1-inch) to 75 mm (3 inches) long.

a. Design Considerations.

(1) *Wood Mulch.* Wood mulch is relatively inexpensive and easy to obtain. Mulch maybe used as a surface covering in natural areas or as safety surfacing in play equipment use zones. It may be produced by "chippers" used in tree pruning operations. It is possible to acquire wood mulch from maintenance staff or tree trimming companies, but it must be free from harmful plants, pesticides, or other contaminants. Wood mulch may be produced from hardwoods or softwoods.

(2) *Bark Mulch.* Bark mulch is bark that has been stripped from trees and shredded. It is readily available from many nurseries or landscape supply companies.

(3) *Manufactured Wood Chips.* Some manufacturers produce uniform wood chips specifically for use as play area safety surfacing. For these products, ASTM F 1292 testing results may be available from the supplier. This material may be more consistent in type and quality than wood mulch or bark mulch.

(4) *Additional Selection Considerations.*

(a) Appearance. Determine whether the surface will look attractive and will complement the appearance of play equipment.

(b) Drainage. Positive drainage should be provided. For many play areas, subsurface drainage should be provided. A compacted gravel subsurface may also be considered.

(c) Installation Requirements. Wood products should be installed over a compacted subgrade covered with geotextile fabric. Wood products manufactured for the purpose of playground safety surfacing should be installed according to the manufacturer's instructions at the minimum depth specified in this manual. Surfacing should be contained with a barrier.

(d) Play Activities. Wood products surfacing materials can provide opportunities for manipulative play. Children can explore the surfacing materials for living organisms and other "finds," such a coins, bottle tops, and small plastic toys. The materials harbor and conceal various insects that are usually harmless and provide learning opportunities for children.

(e) Maintenance. It should be determined whether adequate maintenance can be provided to maintain the surface. Regular maintenance is necessary to maintain surfacing depth and to prevent the geotextile fabric from becoming a trip hazard.

(f) Pests. It should be determined if pests will increase the maintenance requirements and reduce the material's life span.

(g) Manufactured Wood Chips. When specifying manufactured uniform wood chips, test results should be obtained from the manufacturer to verify that a fall onto this surface from the height specified by the purchaser results in a g-force rating of no more than 200 g's and a HIC value of no more than 1,000. In addition, photos of tested samples should be obtained from the manufacturer to compare with the purchased material. A copy of the product warranty and an estimate of the anticipated durability of the material should also be obtained.

b. Recommended Ages. Wood products may be used as a safety surface in play areas designed for children ages 2 and older.

c. Safety Guidelines.

(1) *Variable Impact Attenuation.* The impact attenuation of different wood products varies, and specific test results for materials may not be available. Weather such as rain, high humidity, cold temperatures, or freezing conditions may affect impact attenuation. With the passage of time, the materials may decompose and become pulverized, reducing their impact-attenuating performance.

(2) *Installation.* Loose-fill surfacing materials will not be installed over concrete or asphalt surfaces.

(3) *Maintenance.* The material requires continuous maintenance, such as leveling, grading, and replenishing, to maintain its impact-attenuating ability. The materials are gradually displaced by wind or the playing action of children, reducing the thickness required for impact attenuation.'

(4) *Contaminants.* Unless a manufactured material is purchased, a consistent product that is free from contaminants may be difficult to obtain.

(5) *Splinters.* Chips may be splintery when first spread.

(6) *Microbial Growth.* When wet, organic loose-fill materials are subject to microbial growth.

(7) *Waste and Litter.* The material conceals animal excrement and other trash, such as broken glass, nails, pencils, and other sharp objects that puncture and cut. Daily removal of waste and litter is required.

(8) *Flammability.* Wood products are flammable.

d. Accessibility. The acceptability of wood products as an accessible surface for people with disabilities is still controversial. Some wood products may be accessible to wheelchair users when matted down. Wood products may not be accessible to children who walk with difficulty or use canes or crutches.

e. Maintenance. The required maintenance level is high. Continuous maintenance will be provided to preserve impact attenuation.

f. Cost. Wood products have a low initial cost and a high maintenance cost.

11-6. Inorganic Loose-Fill Surfacing.

Sand, gravel, and chopped tire are popular inorganic loose-fill surfaces. These materials absorb impacts by changing shape upon impact. Chopped tire also traps air between the particles to provide a cushioning effect. The primary advantage of sand, gravel, and chopped tire surfacing is that the materials are easy to install, and readily available. The materials are not ideal for microbial growth. Sand and gravel are nonflammable and initially inexpensive. The primary disadvantage of these materials is that continuous maintenance is required to preserve impact attenuation.

a. Design Considerations.

(1) *Sand.* The natural appearance of sand and its importance as a play material makes it a popular safety surface. Sand is an excellent manipulative play material, especially if provided in conjunction with water. However, separate sand play areas should be provided away from play equipment use zones. The impact-attenuating ability of sand is greatly reduced when wet. Therefore, it is not recommended for use as a safety surface in regions with wet climates, such as the Pacific Northwest. Sand is abrasive to floors when tracked indoors. Sand used as a safety surface will meet the following specification: Sand will be rounded naturally or by mechanical means; washed; free of dust, clay, soil, hazardous substances, or foreign objects; and sieved as shown in table 11–4.

(2) *Gravel.* Gravel drains well and does not easily freeze or compact. It is popular in cold and wet climates. It should not be used as a safety surface in play areas designed for children under 3 years because of the potential for choking. Gravel used as safety surfacing will meet the following specification: Gravel particles will be rounded naturally or by mechanical means; washed; free of dust, clay, soil, hazardous substances, or foreign objects; and sieved as shown in table 11–4.

(3) *Chopped Tire.* Chopped tire safety surfacing is highly effective, trapping air between particles to provide an impact-attenuating effect. Chopped tire is nonabrasive. It does not absorb moisture or attract cats, dogs, rodents, or insects. Select chopped tire manufactured specifically for safety surfacing. The results of impact attenuation tests should be obtained from the manufacturer. Chopped tire safety surfacing that is manufactured from steel belted tires will not be used. Chopped tire used as safety surfacing will meet the following specification: Chopped tire will be asymmetrical rubber particles a maximum of 12 mm (1/2-inch) in size; and free of metal, harmful chemical, and foreign material.

Table 11-4. Sieve Analysis of Sand and Gravel.

SAND	
Sieve Size	**Percent Passing**
10 mm (3/8-inch)	100%
#4	99-100%
#8	81-95%
#16	53-75%
#30	35-56%
#50	20-25%
#100	5-9%
#200	less than 2%
GRAVEL	
Sieve Size	**Percent Passing**
12 mm (1/2-inch)	100%
10 mm (3/8-inch)	75-85%

(4) *Selection Considerations.*

(a) Appearance. It should be determined whether the material will look attractive and will complement the appearance of playground equipment.

(b) Maintenance. It should be determined whether a high level of maintenance can be provided to maintain impact attenuation.

(c) Installation Requirements. Sand or gravel should be installed over a compacted subgrade. Chopped tire should be installed over a subgrade of compacted gravel covered with geotextile fabric. Barriers should be provided to contain these loose-fill materials.

(d) Drainage. Positive drainage should be provided. Many play areas may require subsurface drainage under inorganic loose-fill surfaces.

(e) Chopped Tire. Test results should be obtained from the manufacturer verifying that a fall onto this surface from the height specified by the purchaser results in a g-force rating of no more than 200 g's and a HIC value of no more than 1,000. Photos of tested samples should be obtained from the manufacturer to compare with the purchased material. A copy of the warranty for the material and an estimate of the anticipated durability of the material should be obtained.

(f) Pests and Vandalism. It should be determined whether pests, such as fleas, or high vandalism will increase maintenance requirements,

CHAPTER 12

PLANT MATERIALS

12-1. Introduction.

Plants and natural ground covers add diversity and seasonal change to children's outdoor play areas. Plant materials should be integrated into play areas. Plant materials enhance site aesthetics, provide shade, and support memorable play experiences. People of all ages respond to natural ground covering, flowering shrubs, deciduous trees, banked borders of flowers, herb gardens, and imaginative garden designs. This chapter describes the uses of plants and natural ground covering in children's outdoor play areas, play activities supported by plant material, and plant selection criteria.

12-2. Uses of Plant Material.

The variety of functional uses that plant material can serve should be considered when developing a conceptual design for children's outdoor play areas. Additional guidance is provided in TM 5–803–13/ AFM 126–8.

a.. Barriers. Plant material should be used to create or enhance barriers and enclosures. Turf and ground cover create natural edges to define play component areas. Plants provide more depth, interest, and spatial variety than fencing.

b. Screens. Plant screens of evergreen trees and shrubs can serve as visual barriers. Vine-covered fences and densely branched deciduous plants may also serve these purposes. Design requirements and the plant's natural characteristics, such as height, spread, and density, should be matched to create a low-maintenance screen.

c. Transitions. Transitional plantings alert children to changes in activities or use of spaces. Plants soften the transition between indoors and outdoors, allowing people to adjust more easily to changes in light levels.

d. Landmarks. Objects with a clear visual identity, such as trees, large shrubs, and familiar groupings of plants, function as landmarks. Landmarks provide the user with a memorable sense of place and a feeling of security.

e. Climate Modification. Vegetation is an effective climate modifier. Plants provide a greater variety of microclimates than manmade structures. For children's play areas, adequate shade is extremely important in hot climates. Natural shade in play areas encourages day-long summertime use. Trees and shrubs also provide shelter from the wind. Spreading, deciduous tree species provide shade in summer and shed leaves to let in winter sun.

f. Erosion Control. Both weather and children at play can cause significant erosion in play areas. Plants with shallow, lateral root systems bind the soil to resist erosion. Creeping species of ground cover generally have good powers of rejuvenation and are suitable for heavily used areas. Ground covers with wide leaves rather than fine leaves are more durable. Broad-leaved deciduous trees help control erosion by extending the runoff time and promoting percolation of water back into the ground. Tree roots stabilize soil on hillsides and insulate loose soil from precipitation and wind. Trees and shrubs used as windbreaks mitigate the erosion caused by wind.

g. User Contact and Mitigation. Opportunities for user contact with plant materials should be provided while protecting plants from permanent damage.

(1) *Barriers.* Barriers, such as low walls, should be used to protect plants from excessive damage and provide children with plant contact.

(2) *Plant Selection.* Plants best suited for survival in children's outdoor play areas should be selectd.

(3) *Circulation.* Pathways that consider anticipated circulation routes should be provided to avoid unnecessary erosion and replanting.

(4) *Restrict Access.* Human access to planting areas should be restricted when necessary to reduce environmental impacts. Foot traffic may be discouraged by providing plant materials with denser branching.

h. Play. The use of' plant materials to support play activities is described in detail in this chapter.

i. Sensory Stimulation. Plants and ground covers provide greater sensory stimulation than synthetic, manufactured objects, Plants respond to weather variations and seasonal cycles, and provide varied textures, colors, forms, fragrances, and sounds.

(1) *Identity.* Distinctive plantings and specimen plants should be included to provide visual identity and to create a sense of place in children's outdoor play areas.

(2) *Seasonal Change.* Plant types that display seasonal change should be selected to provide sensory stimulation and educational opportunities. The effects of seasonal change on climate modification efforts should be considered.

(3) *Movement.* Plants can enhance the experience of movement through the play area. Plants can

be used along paths to create a sequence of views, textures, smells, light, shade, and color.

(4) *Form, Texture, and Color.* Plant material with varied forms, textures, and colors should be selected to provide diversity in play areas. A variety of leaf textures should be included: evergreen with deciduous; shiny with rough; serrated with smooth; and thin with thick. In addition, plants should be selected for seasonal change: evergreen vs. deciduous; color through the seasons; early leaves; late flowers; and flowers and fruit.

12-3. Plants in Play Activities.

Plants and natural ground covers should be integrated into the design throughout the play area, but the play value of plant material itself should also be considered. Together with soil, sand, and water, plant materials provide opportunities for manipulative play that are quite different from the static, unchangeable character of fixed play equipment. Plants and ground covers provide opportunities for exploring nature; playing with leaves, seeds, and branches; social interaction; climbing; constructive play; and field play.

a. Exploring Nature. When designing with plant material, the natural plant communities and the animal habitat created should be considered. Natural habitat conditions should be closely replicated to compliment the regional ecosystem.

(1) *Wildlife.* Small animals are an environmental education resource for children. Native plant communities should be included as wildlife habitats in children's outdoor play areas. Plants that bear fruits, cones, and seeds should be provided. These attract birds, squirrels, butterflies, and insect populations. Habitat areas should not be overly manicured to remove materials that animals depend upon for survival.

(2) *Natural Areas.* Woods and natural areas should be left in a rough state. However, thorny material, poisonous or rash-producing plants, and dead branches and twigs at eye or neck height should be removed. Natural areas provide children with opportunities to observe nature and participate in dramatic play.

b. Plant Parts. Plants provide a variety of play and learning materials that are virtually free of cost, including leaves, flowers, fruit, nuts, seeds, and sticks. Plants should be selected for craft, culinary, and dramatic play potential.

c. Social Interaction. Natural environments create comfortable places for social activity. Trees and shrubs should be used to create a variety of gathering spaces that can be used by all ages. Spaces for large and small group gatherings should be provided in children's outdoor play areas. Mature shrubs make excellent private places and refuges for young children.

d. Climbing. Some trees and shrubs provide excellent support for climbing. Consider planting some trees or large shrubs that support climbing.

e. Construction. Children use branches to construct play materials. Trees and shrubs also provide branches that can be used for suspending play items, such as flags and banners. For these activities, species with low, spreading, horizontal branches should be selected.

f. Field Play. Turf should be used on sports playing surfaces, and in unstructured recreation areas, including surfaces of mounds and slopes. Small turf areas may be provided for toddlers and for infant crawl areas.

124. Selection Criteria.

Plant selection should be coordinated with the installation design guide or plant list.

a. *Design Function.* Materials should be selected that meet the intended design functions described in this chapter.

b. Local Conditions. Plant material that requires minimal maintenance and is suited to local conditions, such as climatic extremes and soil types, should be selected. The civil or installation engineer or local horticulturist should be contacted for guidance.

c. Native and Introduced Species. A mix of native and introduced plants should be selected. Native plants provide hardy background planting and are usually more resilient. Introduced species are region-hardy plants that add variety and interest.

(1) *Native Plants.* Native species are adapted to the region, have local ecological and cultural significance, and offer children learning opportunities. Native plants are hardier and less likely to incur disease or insect problems. Native plantings should be used to provide a foundation of plant material for play, exploration, and learning activities.

(2) *Introduced Species.* In children's outdoor play areas, a mix of species is often preferred. Introduced species should be used selectively to increase play area diversity, enhance sensory variety, and increase the resiliency of the plant setting.

(3) *Varied Plant Material.* Native and introduced species should be used to provide a variety of flowers, foliage, and colors, and varied forms.

d. Drought Resistance. Extreme weather conditions place considerable stress on plants; many plants cannot tolerate such conditions. Drought-tolerant species should be selected for children's outdoor play areas. These species conserve water.

e. Hardiness. Plants in children's play areas must be capable of withstanding a high degree of human activity. Species that are quick-growing and heal quickly after breaking should be selected.

f. Low-maintenance. Select plant material with limited maintenance requirements.

(1) *Plant Quality.* Plants should be of a size and quality that will survive the high impact of a children's play area.

(2) *Plant Maintenance.* Plant areas used by children will never be maintenance-free. Designers should consider that expert vegetation management should be provided in areas used by children. Pruning regimes and other maintenance procedures should respond to play requirements and child safety. Plants should be selected that will minimize maintenance requirements unless required for play.

g. Size. Larger, mature plants are able to withstand impact of human activity better than smaller, younger plants. Shrubs should be selected which are as large as economy will allow. Trees with a minimum 50 mm (2-inch) diameter truck should be selected.

h. Access to Plants. Specific design strategies are needed to provide maximum access to plant materials and to avoid creating hazards for children with disabilities. Guidelines for providing access to plant materials are provided in this chapter.

i. Child Safety. Child safety requirements are an important selection criterion for plant materials in children's outdoor play areas. These requirements are described in this chapter.

12-5. Accessibility.

Plant materials can create intimate, touchable elements that are accessible to children with disabilities. These materials attract all children, providing excellent opportunities for interaction, shared experiences, and integration. For this reason, every effort should be made to integrate plants into the design throughout the play area, rather than restricting plants to segregated nature areas. Guidelines for maximizing accessibility to plant materials follow.

a. Access to Plants. Opportunities for close contact with plant materials should be provided.

(1) *Accessible Height.* Plant species should be selected that provide play experience at a height of 460 to 1200 mm (18 to 48 inches). This optimizes access for children who use wheelchairs or cannot bend down. Containers or raised beds offer an excellent means for bringing plant material to this height.

(2) *Trees.* In order to allow disabled children to build an accessible tree house or to experience the feeling of being in the treetops, low-branching and weeping type trees and low-growing vegetation should be provided.

(3) *Accessible Pathways.* Accessible pathways should be provided that allow children using wheelchairs or assistive walking devices to get up close to plants for play. Natural ground covers are not accessible surfaces for people who use wheelchairs, canes, walkers, or crutches.

(4) *Raised Beds and Transfer Points.* Providing raised turf areas should be considered to allow children who use wheelchairs to transfer onto the turf. Raised beds or trellises for ground covers also provides opportunities for direct contact with plant material.

b. Shade. Shade is important for some children and adults with disabilities. A diversity of shaded, partially shaded, and nonshaded areas should be provided to meet a wide range of needs.

c. Sensory Experiences. A variety of sensory experiences should be provided using plants, such as texture, fragrance, wind effects, sound, and seasonal color. Plants with interesting smells and shapes are particularly beneficial to children with visual disabilities.

d. Hazards for Children With Limited Vision. Low-hanging branches over main pathways should be pruned under 2000 mm (80 inches) high (TM 5–803–13) (fig 12–1).

12-6. Child Safety.

Child safety factors should be considered in the selection and maintenance of plant materials.

a. Surfacing Considerations. Falls from or onto plant material and slip hazards are important considerations.

(1) *Safety Surface.* Turf and natural ground covers should not be used as safety surfaces in play equipment use zones.

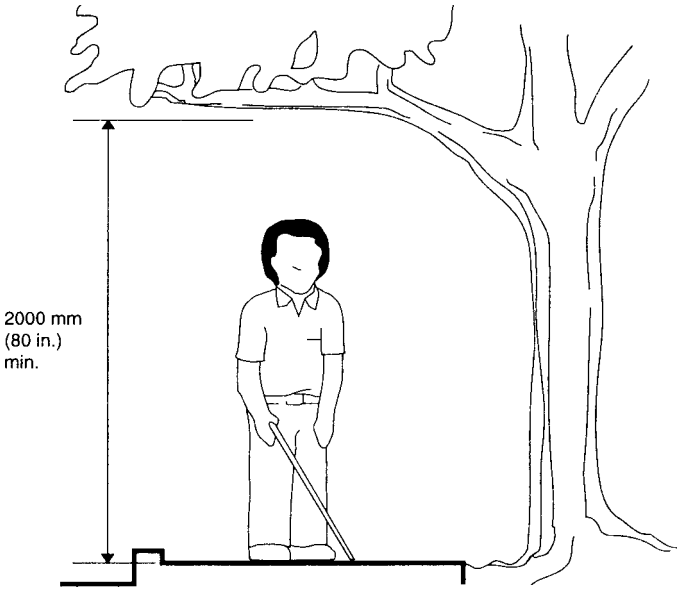

Figure 12–1. Headroom Along Pathways.

(2) *Plant Parts. Trees* and shrubs that shed plant parts should not be located where excessive shredding will create a hazard, such as over pathways, or where shedding will create a severe maintenance issue.

(3) *Branching Plant Material.* Plant material with flexible branches should be used where children may run through plant material.

b. Guying and Staking Methods. Protrusion and entrapment criteria should be applied to staking methods. Horizontal stakes or tree guards should be used. Diagonal guy wires which create trip hazards will not be used.

c. Pests. Use of plant materials that attract harmful pests should be avoided.

d. Undesirable Plant Characteristics. Harmful or undesirable plant material should be eliminated from play areas, such as plants with thorns, those that excrete sticky sap, trees that drop large limbs, and plants that require excessive pruning to discourage climbing. Short turf species are less likely to conceal sharp or foreign objects. Plants with berries or fruit should be avoided in play areas intended for children under 3 years.

e. Visual Barriers. Carefully consider visibility when designing with plant materials, and avoid creating visual barriers. Visibility should be provided from adjacent housing and from the street. Clear lines of visibility should be provided to all parts of the play area from more than one location within the play area.

f. Pesticides and Fertilizers. To the extent possible, natural methods of pest management and weed control will be employed. This process can be facilitated by selecting pest- and disease-resistant plant species. Species that require extensive fertilization should be avoided.

g. Poisonous Plants. The great majority of plants are highly beneficial and perfectly safe for children's play areas. However, there are a number of naturally occurring poisons in the plant world. Some poisons are highly concentrated in certain plant species and can be dangerous to humans if ingested. Others may cause dermatitis or allergic reactions. For example, one or two seeds from a castor bean plant (Ricinus communis), if chewed and swallowed, may be deadly to young children. In some plants, poisons are concentrated in certain plant parts. Others are poisonous when raw or unripe, and edible when cooked or ripened. The seriousness of the reaction depends on the amount of plant material eaten as well as the condition and tolerances of the person affected. Young children are likely to have more pronounced responses to plant toxins than adults simply because of size.

(1) *Identify Poisonous Species.* There are over 700 known poisonous plants in North America. Designers should be familiar with poisonous local species. A local horticultural expert should be contacted for assistance in plant identification. The American Medical Association *Handbook of Poisonous and Injurious Plants* is an excellent comprehensive reference for more information.

(2) *Eliminate Poisonous Plants.* Poisonous plants will not be provided in children's outdoor play areas. Existing poisonous vegetation will be removed.

12-7. Plant List Development.

Based on criteria presented in this chapter, a list of local plants and ground cover should be developed that identifies the most appropriate regional species for each use, such as play, wildlife habitat, and shade. A list of local species that are highly poisonous or otherwise unsuitable in children's play areas should also be developed. These lists should be used to evaluate existing plantings in children's outdoor play areas, select additional species, and develop new designs.

CHAPTER 13

SELF-HELP

13-1. Introduction.

Before identifying self-help projects in a proposed plan area design, the designer will understand the child safety considerations that apply to self-help projects.

13-2. Play Equipment.

Manufactured play equipment should be purchased rather than site-built. It should be installed by professionals who are knowledgeable about safety, play area construction, and installation.

a. Site-Built Equipment. Site-built play equipment is not recommended because all play equipment must be designed to meet child safety standards (CPSC, ASTM F 1487). This is difficult to accomplish with a nonmanufactured product. Because the cost of purchasing materials for construction is nearly equal to the cost of purchasing manufactured play equipment, there is no cost savings in building play equipment. Additionally, the installation will assume liability for any accidents that occur on site-built play equipment.

b. Installation of Manufactured Play Equipment. Troop sponsors with construction backgrounds may install manufactured play equipment. If the equipment is to be installed through self-help, a manufacturer's representative who is experienced in the installation, adjustment, and operation of the playground equipment should be onsite during installation. The safety manager should participate in periodic and final inspections to ensure that the play equipment complies with child safety requirements presented in this manual.

13-3. Appropriate Volunteer Projects.

The use of community volunteers is recommended for simple self-help projects, such as building benches or planters, or spreading loose-fill safety surfacing. Staff trained in play area construction and child safety will supervise all volunteer construction. The safety manager should ensure that the project complies with child safety requirements presented in this manual.

APPENDIX A

REFERENCES

Government Publications

Department of the Army and Air Force

TM 5–803–5 NAVFAC P-960 AFM 88–43	Installation Design
TM 5–803–10 NAVFAC P-457 AFR 88–33	Planning and Design of Outdoor Sports Facilities
TM 5–803-12	Planning of Outdoor Recreation Areas
TM 5–803–13 AFM 126–8	Landscape Design and Planting

General Services Administration/Department of Defense/Department of Housing and Urban Development/ U.S. Postal Service

FED–STD-795	Uniform Federal Accessibility Standards

Department of the Air Force

AFI 32–1024	Standard Facility Requirements
MIL HDBK 1190	Facility Planning and Design Guide

Department of Justice

Office of the Attorney General, US Department of Justice, Washington, DC 20530

36 CFR 1191	Americans with Disabilities Act Accessibility Guidelines

US Consumer Product Safety Commission, Washington, DC 20207

Handbook for Public Playground Safety (31 pages), Pub. No. 325, 1994

Nongovernment Publications

American Society for Testing and Materials (ASTM), 1916 *Race Street, Philadelphia, PA 19103*

C 136	Standard Method for Sieve Analysis of Fine and Coarse Aggregates (1984a; R1993)
F 1292	Standard Specification for Impact Attenuation of Surface Systems Under and Around Play Equipment (1991; R1993)
F 1487	Standard Consumer Safety Performance Specification for Playground Equipment for Public Use (1993)

American Wood Preservers Association (AWPA), 1945 Gallows Road, Suite 550, Vienna, VA 22182

C 17	Consumer Information Sheet Inorganic Arsenical Pressure-Treated Wood (n.d.)

American Medical Association (AMA), 515 North State Street, Chicago, Illinois 60610

ISBN 0–89970-183–3	Lampe, Keneth F. AMA Handbook of Poisonous and Injurious Plants (1985)

American Institute of Graphic Arts (IAGA), 1059 Third Avenue, New York, New York 10021

American Institute of Graphic Arts. Symbol Signs (2nd Edition) (1993!

APPENDIX B

QUALIFYING FIRMS

B-1. Introduction.

The following description should be used to develop a selection or bidding announcement to select a play area designer who will meet the requirements for developing unsupervised children's outdoor play areas:

B-2. Required Experience (Factor 1).

The qualifying firm should demonstrate specialized experience and technical competence in the work required, based on the following sub factors:

a. Child Development. The qualifying firm should demonstrate an understanding of the play program of children's play activities and the physical environment for children's play.

b. Accessibility. The qualifying firm should demonstrate experience in designing integrated play areas for children with and without disabilities.

c. Outdoor Play Area Design. The qualifying firm should demonstrate experience in developing outdoor play areas for specific age groups.

d. Landscape Design. The qualifying firm should demonstrate experience in the use of landscape plants and material in designing children's outdoor play areas, the child safety requirements of plant materials, and using plant materials to meet play program requirements.

e. Play Area Components and Safety Surfacing. The qualifying firm should demonstrate experience in the selection and design of play elements and safety surfacing materials.

f. Workshops and Guidance Materials. The qualifying firm should demonstrate experience in developing and conducting workshops, and preparing guidance materials such as instructions, work guides, checklists and audiovisual materials.

g. Construction Documents. The qualifying firm should demonstrate experience in the preparation of construction drawings and specifications.

h. Cost Estimates. The qualifying firm should demonstrate experience in preparing construction cost estimates.

B-3. Professional Qualifications (Factor 2).

The professional qualifications necessary for the satisfactory performance of all required services should be evaluated based on the following subfactors:

a. Multi-Disciplinary Firms. The qualifying firm should be multi-disciplinary, and should include a landscape architect specializing in site planning and site design, the development of specifications and cost estimates, and project management.

b. Play Area Specialist. The qualifying firm should be a specialist in designing and developing children's outdoor play areas.

B-4. Rating of Factors.

Qualifying firms should be evaluated according to the relative importance of each factor and sub factor. Factor 1 is the most important factor for award and slightly more important than Factor 2. Factor 2 is almost of equal importance to Factor 1. Under Factor 1, subfactors (a) through (e) are more important than subfactors (f) through (h). Subfactors (f) through (h) are of equal importance. Under Factor 2, subfactor (a) is more important than subfactor (b).

B-5. Responses.

All selection factors must be clearly addressed in the response.

GLOSSARY

ACCESSIBLE, ACCESSIBILITY.

Accessible to and usable by persons with disabilities.

ACTIVITY.

An act or action engaged in during play: running, jumping, touching, pretending, thinking, constructing, etc.

ADJACENCY DIAGRAM.

A diagram that illustrates relationships between play area components necessary for safety and function.

AGE GROUP, PRIMARY AGE GROUP, USER AGE GROUP.

The age appropriate user of a play area, play area component, play event, or design element. Three age groups are addressed in the manual: 6 weeks to 5 years, 5 to 9 years, and 9 to 15 years.

BEHAVIOR.

The actions or reactions of children engaged in play. The child's responses to the particular play setting or event.

COGNITIVE, COGNITIVE DEVELOPMENT.

The process by which a child learns through perception, reasoning, experimentation, exploration, intuition, or knowledge. A cognitive play activity is one which increases the child's learning or knowledge.

COMPONENT, PLAY AREA COMPONENT.

A play area component supports a particular type of play activity, such as dramatic play; sports and games; and sand play; and contributes to the safety, convenience, and comfort of users, such as signage.

COMPOSITE PLAY EQUIPMENT.

Manufactured play equipment that is composed of two or more play events that are functionally attached; an example is a combination climber, horizontal ladder, track ride, and slide.

CONCEPT DESIGN.

A preliminary design that incorporates the design program.

DEVELOPMENT.

To increase or expand the child's physical, cognitive, and social development.

DEVELOPMENTAL, DEVELOPMENTAL NEEDS.

The experiences or activities required to stimulate a child's physical, cognitive, or social growth.

ELEMENT, DESIGN ELEMENT.

An item that exists or site or is introduced to the site and contributes to the play area design; one or more design elements comprise a play area component.

EMOTIONAL, EMOTIONAL DEVELOPMENT.

The feelings or sensitivities that are expanded through play, such as fear, joy, sadness, love, compassion, etc.

FREESTANDING EQUIPMENT.

Manufactured play equipment that consists of a single play event that is not connected or functionally linked to another piece of manufactured play equipment.

LOOSE PARTS.

Play equipment, toys, or props that are moveable and can be used or combined to construct things or represent things, e.g., cardboard, sheets, containers for filling, small toy cars, etc.

MANUFACTURED PLAY EQUIPMENT.

A manufactured play structure, for use in public play areas, that is anchored to the ground or not intended to be moved.

PHYSICAL, PHYSICAL DEVELOPMENT.

Involving or influencing movement of the body, including muscular, circulatory, respiratory, and nervous systems.

PLAY AREA.

The area where children engage in play activities; an area constructed specifically for children's play.

PLAY EVENT.

A piece of manufactured play equipment that supports one or more play activities.

SOCIAL, SOCIAL DEVELOPMENT.

Living, performing, and communicating within a community or other organized group of people; the skills required to participate within such an organization or the activities which stimulate development of such skills.

USE ZONE.

The clear area under and around play equipment where a child could land when falling, jumping, or exiting from the equipment.

The proponent agency of this publication is the Office of the Chief of Engineers, United States Army. Users are invited to send comments and suggested improvements on DA Form 2028 (Recommended changes to Publications and Blank Forms) to HQUSACE (CEMP-ET), WASH, DC 20314-1000.

By Order of the Secretaries of the Army and the Air Force:

Official:

DENNIS J. REIMER
General, United States Army
Chief of Staff

JOEL B. HUDSON
Acting Administrative Assistant to the Secretary
United States Army

MERRIL A. McPEAK
General
United States Air Force
Chief of Staff

Official:

EUGENE A. LUPIA,
Major General, United States Air Force
Director of Information Management

Distribution:

To be distributed in accordance with the initial distribution number (IDN) 340713, requirements for TM 5–803–11.

Air Force: F

*U.S. G.P.O.:1997-418-285:40090