BY ORDER OF THE
SECRETARY OF THE AIR FORCE

AIR FORCE INSTRUCTION 13-217

1 SEPTEMBER 2002

Space, Missile, Command, and Control

DROP ZONE AND LANDING ZONE PROCEDURES

COMPLIANCE WITH THIS PUBLICATION IS MANDATORY

NOTICE: This publication is available digitally on the AFDPO WWW site at: **http://www.e-publishing.af.mil.**

OPR: HQ USAF/XOOS
(Maj Chris H. Schweinsberg)
Supersedes AFI 13-217, 1 June 1999

Certified by: HQ USAF/XO
(Lt Gen Charles F. Wald)
Pages: 83
Distribution: F

This instruction implements AFPD 13-2, *Air Traffic Control, Airspace, Airfield and Range Management.* This publication prescribes the procedures, techniques, and requirements for operating drop and landing zones. It governs the content, documentation, and approval processes of those drop zone, landing zone, and helicopter landing zone surveys. This publication applies to all active duty forces, the Air National Guard (ANG), and the Air Force Reserve Command (AFRC). Send recommended changes through command channels to HQ USAF/XOOS, 1480 AF Pentagon, Washington DC 20330-1480 (email: **mailto:scats.xoos@pentagon.af.mil**) on Air Force (AF) Form 847, **Recommendation for Change of Publication**. Users may supplement this instruction. Major Commands (MAJCOM), field operating agencies (FOA), and direct reporting units (DRU) send one copy of each printed supplement to HQ USAF/XOOS.

SUMMARY OF REVISIONS

This document is substantially revised and must be completely reviewed.

Significant changes include: an appropriate title, deleting use of the all-inclusive term assault zone, the requirement to conduct a helicopter landing zone survey, LC-130 Skiway and Ski Landing Area procedures, and the introduction of AF Form 4303, **Helicopter Landing Zone Survey**, and AF Form 4304, **Drop Zone / Landing Zone Control Log**.

Maintain and dispose of records created as a result of prescribed processes in accordance with (IAW) AFMAN 37-139, *Records Disposition Schedule*.

Chapter 1—INTRODUCTION **6**

1.1. General 6

1.2. International Agreements. 6

1.3. Waiver Authority. 6
1.4. Drop Zone and Landing Zone Survey Requests. 6
1.5. Zone Availability Report. 6

Chapter 2—DROP ZONE OPERATIONS 7

2.1. General. 7
2.2. Responsibility. 7
2.3. Drop Altitudes. 7
2.4. Drop Airspeeds. 7
Table 2.1. Standard Drop Zone Size Criteria. 8
2.5. Drop Zone Criteria. 9
Figure 2.1. Circular Drop Zone Computation. 11
Figure 2.2. Area Drop Zone. 11
Table 2.2. Standard Point of Impact Placement. 12
2.6. Instrument Meteorological Condition Airdrops. 14
2.7. Aerial Power Line Restrictions. 14
2.8. Airdrop Winds. 15
Table 2.3. Surface Wind Limits for CDS/Equipment Airdrops. 15
Table 2.4. Surface Wind Limits for USAF Personnel Airdrops. 16
Table 2.5. Mean Effective Wind Computation Table (10-Gram Helium Balloon). 17
2.9. Drop Zone Markings. 18
2.10. Standard Drop Zone Markings (Not required for AFSOC assigned/gained, aircraft OPCON to USSOCOM, or a theater special operations command). 18
Figure 2.3. Standard Drop Zone Markings. 19
2.11. Non-Standard Drop Zone Markings (Primary for AFSOC assigned/gained, aircraft OPCON to USSOCOM, or a theater special operations command). 19
Figure 2.4. Military Free-Fall Drop Zone Markings. 20
Figure 2.5. Jumpmaster Directed Airdrop, Moving Target Procedures. 21
2.12. Airdrop Communications. 22
2.13. Control Point Location. 23
2.14. En Route and Terminal NAVAIDS. 24
2.15. Ground Marked Release System. 24

Figure 2.6. Ground Marked Release System Day and Night Markings. 25
Table 2.6. Ground Marked Release System Load Drift Constants (K). 26
Table 2.7. Ground Marked Release System Forward Throw Distance Data. 26
2.16. Verbal Initiated Release System. 27
2.17. Drop Zone Personnel. 27
2.18. Drop Zone Controller Responsibilities. 28
2.19. Drop Zone Safety Officer. 29
2.20. Drop Zone Scoring. 30
2.21. Off Drop Zone Reporting Procedures. 30
2.22. Drop Zone Surveys. 31
2.23. Drop Zone Review Process. 33

Chapter 3—LANDING ZONE OPERATIONS 35

Section 3A Landing Zone Operations 35
3.1. General. 35
3.2. Airlift Mission Commander Responsibilities. 35
3.3. Landing Zone Selection. 35
3.4. Landing Zone Classification. 35
Table 3.1. Minimum Runway Criteria. 36
3.5. General Landing Zone Criteria. 37
3.6. Landing Zone Markings. 39
Figure 3.1. Airfield Marking Pattern - 1 (Day). 41
Figure 3.2. Airfield Marking Pattern - 1 (Night/Instrument Approach). 41
Figure 3.3. Airfield Marking Pattern - 2 (Day). 42
Figure 3.4. Airfield Marking Pattern - 2 (Night). 42
Figure 3.5. Airfield Marking Pattern - 3 (Day). 43
Figure 3.6. Airfield Marking Pattern - 3 (Night). 43
3.7. Emergency Signals. 44
Table 3.2. Standard Air Traffic Control Light Signals. 44
3.8. Communications. 44
3.9. Terminal NAVAIDS. 44
3.10. Landing Zone Personnel. 44

3.11. Aircraft Rescue and Fire Fighting Requirements. 46
3.12. Landing Zone Review Process. 46
Section 3B Helicopter Landing Zone Operations 46
3.13. General. 46
3.14. Helicopter Landing Zone Selection. 47
3.15. Helicopter Landing Zone Markings. 47
3.16. Helicopter Landing Zone Survey Requirements. 47
3.17. Helicopter Landing Zone Review Process. 48
3.18. Helicopter Landing Zone Survey Updates. 49
Chapter 4—LC-130 SKIWAY AND SKI LANDING AREA CRITERIA 50
4.1. General. 50
4.2. Ski Landing Area Control Officer (SLACO). 50
4.3. Selection of Skiway or Ski Landing Area. 50
4.4. Sea Ice Depth Testing And Evaluation Criteria. 50
Table 4.1. Ice Weight Bearing Capacity. 50
4.5. Skiway Marking. 51
4.6. Surface Preparation And Maintenance. 51
4.7. Flagging Guidance. 52
Figure 4.1. Skiway Marking. 54
Figure 4.2. Cargo Offload/Onload Area. 55
Figure 4.3. Typical Skiway Marker Construction. 56
Figure 4.4. Ski Landing Area Marking. 57
4.8. Forms Prescribed. 58
Attachment 1—GLOSSARY OF REFERENCES AND SUPPORTING INFORMATION 59
Attachment 2—WIND/SEA STATE PREDICTION CHART 67
Attachment 3—STANDARD/METRIC CONVERSION CHART 69
Attachment 4—AF FORM 3823, DROP ZONE SURVEY 70
Attachment 5—AF FORM 3822, LANDING ZONE SURVEY 73
Attachment 6—AF FORM 4303, HELICOPTER LANDING ZONE SURVEY 75

Attachment 7—AF FORM 4304, DROP ZONE / LANDING ZONE CONTROL LOG 82

Chapter 1

INTRODUCTION

1.1. General . This publication outlines drop zone size and marking criteria, aerial delivery methods and parameters, operating procedures for qualified personnel, landing zone survey and helicopter landing zone survey requests and review processes, and LC-130 skiway and ski landing area criteria. Use this publication in conjunction with aircraft flight publications and applicable USAF and MAJCOM directives.

1.2. International Agreements. The Air Force must abide by and implement certain international military standardization agreements. This regulation implements Air Standardization Coordinating Committee (ASCC) Air Standards (AIR STD), North Atlantic Treaty Organization (NATO) Standardization Agreement (STANAG), and International Civil Aviation Organization (ICAO) agreements. These include but are not limited to AIR STD 44/35G, *Drop Zones and Extraction Zones: Criteria, Markings and Information Check Lists*, AIR STD 44/37C, *Criteria for Selection and Marking of Landing Zones for Fixed Wing Aircraft*, STANAG 3146, *Planning Procedures for Tactical Air Transport Operations*, STANAG 3345, *Data/Forms for Planning Air Movements*, STANAG 3570, *Drop Zones and Extraction Zones*, and 3601, *Criteria for Selection and Marking of Landing Zones for Fixed-Wing Transport Aircraft*.

1.3. Waiver Authority. For the purposes of this publication, the term MAJCOM also applies to Direct Reporting Units (DRUs), Field Operating Agencies (FOA), and the National Guard Bureau (NGB). Do not deviate from the policies and guidance in this instruction except in the interest of safety or during contingency operations. Waivers will be requested through command and control channels. Waiver authority rests with the MAJCOM/DO. During contingency operations, waiver authority rests with the air component commander who currently has operational control (OPCON) of forces. Waiver authority may be delegated no lower than an O-6 (Colonel). MAJCOMs will provide HQ USAF/XOOS copies of approved waivers, and file waivers in the back of this instruction until rescinded.

1.4. Drop Zone and Landing Zone Survey Requests. No later than 120 days prior to scheduled use, contact the appropriate theater special tactics unit: NORTHCOM/SOUTHCOM/CENTCOM - 720th Special Tactics Group, Hurlburt Field, FL; EUCOM - 352nd Special Operations Group, RAF Mildenhall, England (DSN 314 238-4764); and PACOM - 353rd Special Operations Group, Kadena AB, Japan (DSN 315 634-8545).

1.5. Zone Availability Report. The Zone Availability Report (ZAR) is a comprehensive listing of drop zones, landing zones, and helicopter landing zones available for use by the Department of Defense (DoD). However, the information in the ZAR does not replace the need for a completed survey prior to conducting LZ operations. Completed DZ/LZ/HLZ surveys should be forwarded to HQ AMC/DOKT for inclusion in the ZAR. Completed surveys are also available via fax-on-demand system located at Scott AFB, IL (DSN 576-2899), (Comm 618 256-2899). The Internet site available for military (.mil) users is located at **https://www.amc.scott.af.mil/do/dok/zar.htm**.

Chapter 2

DROP ZONE OPERATIONS

2.1. General. This chapter outlines the basic criteria, markings, and procedures used in support of airdrops. It describes the responsibilities of the Drop Zone Controller (DZC), the supported unit's Drop Zone Safety Officer (DZSO), and the DZ survey process.

2.1.1. There are five primary methods of acquiring the drop zone (DZ) for an airdrop: visual, adverse weather aerial delivery system (AWADS), zone marker (ZM), radar beacon, and global positioning system (GPS). For visual drops, the aircrew drops the personnel/equipment using visual reference to the ground. AWADS/ZM/radar beacon drops use onboard radar or ground-based equipment to acquire the DZ. GPS drops use integrated GPS with high-precision coordinates to determine the computed air release point (CARP) location for all aircraft.

2.2. Responsibility. DZ size and selection are the joint responsibility of the supporting force commander and the supported force commander.

2.2.1. The airlift mission commander is normally responsible for airdrop accuracy and safety-of-flight for all drop zones meeting Air Force minimum size criteria. The use of standard DZ sizes depicted in **Table 2.1.** and **Figure 2.1.** are essential to help ensure safe operations. They are required for Air Force unilateral aircrew training, and recommended for joint training airdrops.

2.2.1.1. The supported force will take responsibility for injury of personnel and damage to equipment that could result from using a DZ that does not meet the standard size criteria in **Table 2.1.** and **Figure 2.1.**

2.2.2. The supported force is responsible for establishment, operation, safety on the DZ, and elimination or acceptance of ground hazards associated with the DZ. They are also responsible for airdrop accuracy when using ground marked release system (GMRS) or verbally initiated release system (VIRS) procedures.

2.2.3. The jumpmaster is responsible for airdrop accuracy when using jumpmaster directed (JMD) release procedures.

2.3. Drop Altitudes. During contingency and wartime operations, the supported forces commander, in conjunction with the supporting forces commander, will determine the drop altitude for personnel and equipment drops. Additional guidance for personnel deployments may be found in AFI 11-410, *Personnel Parachute Operations*, AFMAN 11-411(I), *Military Free-Fall Parachuting*, AFMAN 11-420(I), *Static Line Parachuting Techniques and Train*ing, and AFI 11-231, *Computed Air Release Point Procedures*.

2.4. Drop Airspeeds. Standard parachute airdrops are performed at the airspeed ranges indicated in mission design series (MDS) specific aircraft AFI and AFI 11-231 (for CARP).

Table 2.1. Standard Drop Zone Size Criteria.

ALTITUDE (AGL)	WIDTH (NOTE 1, or (C-17 NOTE 3)	LENGTH (NOTE 2)		
C-130 Container Delivery System (CDS) / Container Release System (CRS) / Container Ramp Loads (CRL)				
To 600 feet	400 yds / 366 m	Single containers	Double containers	
		1	1-2	400 yds / 366 m
		2	3-4	450 yds / 412 m
		3	5-6	500 yds / 457 m
		4	7-8	550 yds / 503 m
		5-8	9 or more	700 yds / 640 m
Above 600 feet	Add 40 yds / 36 m to width and length for each 100 feet above 600 feet (add 20 yds / 18 m to each side of DZ, 20 yds / 18 m to each end)			
CDS (C-141, C-17)				
To 600 feet	450 yds / 412 m	Single containers	Double containers	
		1	1-2	590 yds / 562 m
		2	3-4	615 yds / 540 m
		3	5-6	665 yds / 608 m
		4-8	7-16	765 yds / 700 m
		9-14	17-28	915 yds / 837 m
		15-20	29-40	1065 yds / 974 m
Above 600 feet	Add 40 yds / 36 m to width and length for each 100 feet above 600 feet (add 20 yds / 18 m to each side of DZ, 20 yds / 18 m to each end)			
High Velocity (HV) CDS (using 12, 22, or 26 foot ring slot parachutes)				
To 3000 feet	580 yds / 530 m	660 yds / 604 m		
		Add 50 yds / 46 m to trailing edge for each additional row of containers.		
Above 3000 feet	Add 25 yds / 23 m to each side and 100 yds / 91 m to each end for every 1000 feet increase in drop altitude			
High Altitude Airdrop Resupply System (HAARS) CDS				
To 3000 feet	500 yds / 457 m	1 - 8 containers		1200 yds / 1098 m
		9 or more containers		1900 yds / 1739 m
Above 3000 feet	Add 25 yds / 23 m to each side and 50 yds / 46 m to each end for every 1000 feet increase in drop altitude			
High Speed Low Level Aerial Delivery System (HSLLADS)				
	300 yds / 274 m	600 yds / 549 m		

ALTITUDE (AGL)	WIDTH (NOTE 1, or (C-17 NOTE 3)	LENGTH (NOTE 2)	
PERSONNEL (Static Line)			
To 1000 feet	600 yds / 549 m	1 Parachutist	600 yds / 549 m
		Additional Parachutists	Add 75 yds / 69 m to the trailing edge for each additional parachutist (PI for ST/Pararescue personnel)
Above 1000 feet	Add 30 yds / 28 m to width and length for each 100 feet above 1000 feet (add 15 yds / 14 m to each side of DZ, 15 yds / 13 m to each end)		
HEAVY EQUIPMENT			
To 1100 feet	600 yds / 549 m	1 Platform	1000 yds / 915 m
		Additional Platforms	Add 400 yds / 366 m (C-130), 500 yds / 457 m (C-141/ C-17/C-5) to the trailing edge for each additional platform
Above 1100 feet	Add 30 yds / 28 m to the width and length for each 100 feet above 1100 feet (add 15 yds / 14 m to each side of DZ, 15 yds /14 m to each end)		

NOTE 1 (N/A for AFSOC assigned/gained, aircraft OPCON to USSOCOM, or a theater special operations command):
a. For day visual formations, increase width by 100 yds / 92 m (50 yds / 46 m on each side)
b. For C-141, C-130 SKE AWADS formation, increase width by 400 yds / 366 m (200 yds / 184m on each side)
c. At night, increase width by 100 yds / 92 m for single ship visual drops (50 yds / 46 m on each side) or 200 yds / 184 m for visual formations (100 yds / 92 m on each side).
NOTE 2 (N/A for AFSOC assigned/gained, aircraft OPCON to USSOCOM, or a theater special operations command):
a. At night, increase length by 100 yds / 92 m for visual drops (50 yds / 46 m on each end) (**N/A to C-17 doing GPS drops)**
NOTE 3: C-17 DZ Width Adjustments (more than one may be required)
a. For visual formations (day or night) increase width by 100 yds / 92m (50 yds / 46 m each side)
b. For night pilot directed airdrops, increase width an additional 100 yds / 92 m (50 yds / 46 m each side) (DOES NOT APPLY TO AIRCRAFT PERFORMING GPS DROPS)
c. For SKE HE/CDS formation, increase width by 400 yds / 366 m (200 yds /183 m each side)
d. For personnel formations, minimum DZ basic width using Center PIs is 1240 yards for 2-ship elements and 1800 yds for 3-ship elements. When using offset PIs, minimum basic width is 1100 yds for 2-ship elements and 1300 yds for 3-ship elements

2.5. Drop Zone Criteria. DZ selection should be based on enemy threats, mission requirements, aircraft and/or aircrew capabilities, parachutist capabilities, type parachutes used, and type equipment to be air-dropped. Airdrops of USAF personnel and/or equipment from USAF aircraft on DZs that do not meet AF minimum size requirements must be waivered IAW paragraph **1.3.**

2.5.1. Military Free Fall (MFF) DZ (including operations utilizing MC-4, MC-5, or approved equivalent parachutes deployed in freefall or by static line). The jumpmaster will determine the minimum

size DZ based on the number of personnel to be dropped, jumper proficiency, and the prevailing winds. See paragraph **2.22.4.** for demonstration DZ.

2.5.2. Random Approach DZ. A random approach DZ is a variation of a previously surveyed DZ and of sufficient size to permit multiple run-in headings. Any axis of approach may be used as long as the resulting DZ meets the minimum criteria for the load/personnel being airdropped and remains within the boundaries of the original surveyed DZ (see **Table 2.1.** and **Figure 2.1.**). In all cases, perform a safety-of-flight review IAW paragraph **2.22.1.2.** prior to use.

2.5.3. Area DZ. An area DZ (**Figure 2.2.**) consists of a start point (point A), an endpoint (point B), and a pre-arranged flight path (line-of-flight) over a series of acceptable drop sites between these points. The distance between points A and B generally should not exceed 15 nautical miles and changes in ground elevation within ½ NM of centerline should not exceed 300 feet. The reception committee may receive the drop at any location between point A and point B within ½ NM of centerline. Once the pre-briefed signal or electronic NAVAID has been identified and located, the drop may be accomplished.

NOTE: Area DZs are not applicable to C-17 operations except SOLL II qualified crews.

2.5.4. Circular DZ. The size of the DZ is governed by mission requirements and usable terrain. The PI of a circular DZ is normally at the DZ center to allow for multiple run-in headings (see **Figure 2.1.**, Option 1). For specific missions, the PI location may be adjusted to allow for sequential heavy equipment (HE), mass container delivery system (CDS), etc., on circular DZs (see **Figure 2.1.**, Option 2). However, this limits the run-in heading to only one direction. In all cases, the minimum DZ dimensions for the type and number of loads being dropped must completely fit into the surveyed circular DZ. Refer to **Figure 2.1.** to determine whether the minimum DZ fits into the surveyed circular DZ. For cases where the PI has been relocated, use **Figure 2.1.**, Option 2.

NOTE: The circular DZ size recorded on drop zone survey forms will be calculated using Figure. 2.1., Option 1. This will prevent confusion and reduce the risk of off DZ drops if the circle center point is used as the PI.

Figure 2.1. Circular Drop Zone Computation.

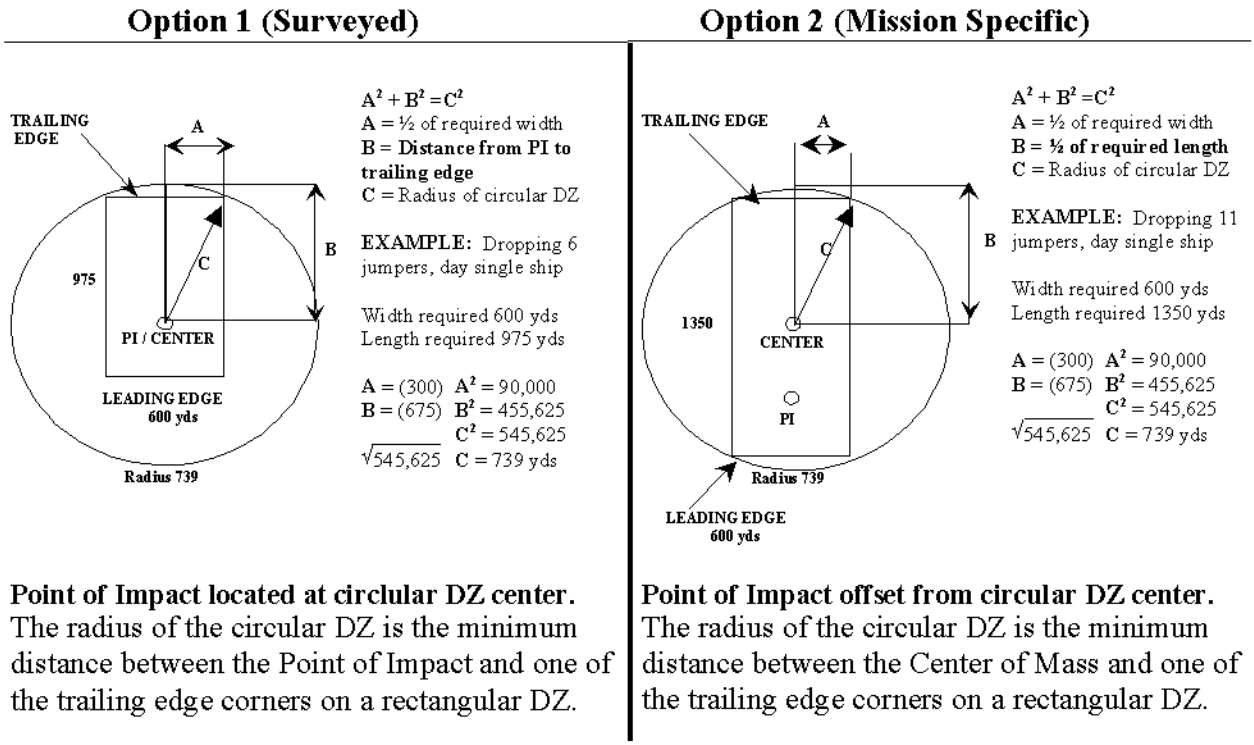

Point of Impact located at circlular DZ center. The radius of the circular DZ is the minimum distance between the Point of Impact and one of the trailing edge corners on a rectangular DZ.

Point of Impact offset from circular DZ center. The radius of the circular DZ is the minimum distance between the Center of Mass and one of the trailing edge corners on a rectangular DZ.

Figure 2.2. Area Drop Zone.

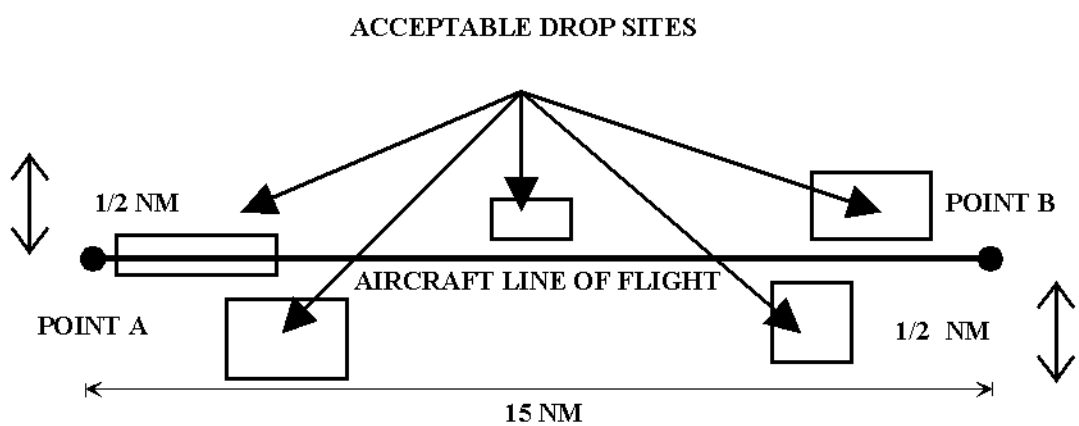

2.5.5. Random Points of Impact (RPI). When mission requirements dictate, the RPI placement option may be used. This option may be exercised in two ways. Option One: The mission commander will notify the DZC at least 24 hours in advance that RPI placement will be used. When the DZ is established, the DZC will randomly select a point on the DZ and establish that point as the PI for the airdrop. In this case, the DZC will ensure that the DZ minimum size requirements for the load being dropped are met and that the entire DZ falls within the surveyed boundaries. Option Two: The mission commander or supported force commander may request the DZ established with the PI at a specific point on the DZ. Requests should be made at least 24 hours in advance. The requester will ensure that

the minimum DZ size criteria is met for the type load being dropped and that the entire DZ falls within the surveyed boundaries.

2.5.6. Multiple Points of Impact (MPI). MPI airdrops are authorized if all personnel involved have been properly briefed. MPI airdrops are defined as an aerial delivery method that allows for the calculated dispersal, both laterally and longitudinally, of airdropped loads to predetermined locations on a DZ. The DZ must meet the minimum size requirements for each PI and the precise location of each PI must be provided to aircrews (see **Table 2.1.** and **Table 2.2.**).

2.5.6.1. Offset PIs are surveyed PIs 250 yards left and right of the surveyed PI. The DZ width must be increased accordingly to meet the distance criteria from the DZ edge to the PI. This manner of placement reduces the effects of wake turbulence across the DZ (see **Table 2.2.**).

NOTE: C-17 formation personnel airdrop may require offset (laterally displaced) PIs (See **Table 2.2.**).

2.5.7. Simulated Airdrop Training Bundles (SATB) DZ. When conducting day/night single-ship or day formation airdrops, crews may use a 300 yard radius circular DZ. Increase DZ radius by 20 yards for C-130 and 100 yards for C-141 night/station keeping equipment (SKE) formations conducted during VMC. SATB airdrops conducted during actual instrument meteorological (IMC) conditions must follow the standard DZ size criteria for the type SATB airdrop being conducted. To facilitate training, SATB airdrops conducted on military reservations/restricted areas can use standard CDS DZ size criteria.

Table 2.2. Standard Point of Impact Placement.

TYPE DROP	DISTANCE FROM SIDES	DISTANCE FROM APPROACH END	
C-130 / C-141 / C-5 (NOTE 1 and 2)		**DAY**	**NIGHT**
CDS C-130 (NOTE 3)	NOTE 4	200 yds / 183 m	250 yds / 229 m
CDS C-141 (NOTE 3)	NOTE 4	225 yds / 206 m	275 yds / 251 m
Personnel	NOTE 4	300 yds / 274 m	350 yds / 320 m
Equipment	NOTE 4	500 yds / 457 m	550 yds / 503 m
C-17 (NOTE 1 and 2)		**DAY**	**NIGHT**
CDS (NOTE 3)	NOTE 4	225 yds / 206 m	275 yds / 251 m
Personnel	Offset PI=250 yds left/right of calculated center PI, else NOTE 4	300 yds / 274 m	350 yds / 320 m
Equipment	NOTE 4	500 yds / 457 m	550 yds / 503 m

NOTE 1: PI location may be adjusted to meet specific mission requirements. Participants must be briefed.
NOTE 2: PI location may be adjusted for aircrew PI acquisition training. The PI may be located anywhere within the surveyed DZ boundaries as long as the minimum required DZ size for that type airdrop and aircraft formation fits within the boundaries, and provided the distance from the leading edge listed above is complied with. For lateral placement, the PI must be located at least one-half the width of the minimum size DZ (based upon type airdrop and aircraft formation) from the closest side of the DZ. All participants must be briefed when using this option.
NOTE 3: For HV CDS and HAARS, laterally position the PI in the center of the DZ.
NOTE 4: PI distance from sides of DZ must be at least one-half the minimum width for that type airdrop.

2.5.8. Water DZ Criteria. Water DZs are normally circular and should meet the minimum size criteria listed in **Table 2.1.** and **Figure 2.1.** Additional restrictions are at the discretion of the using unit.

2.5.8.1. DZ water depth must be a minimum of 10 feet and the area must be free of underwater obstructions to that depth.

2.5.8.2. The surface must be free of floating debris or moored craft. There should be no protruding boulders, stumps, pilings, or other hazards within 400 meters of the center of the DZ.

NOTE: Test and demonstration jumps may utilize water DZs with obstacles within 400 meters of the center of the target area. This exception will not be used to allow repetitive operations into the same DZ encompassing hazardous obstacles.

2.5.8.3. The DZ should not be located near swift currents. For personnel drops, the current should not exceed 2 knots. When current speed measuring equipment is not available, and oceanographic/tidal charts depict currents in excess of 2 knots, a waiver is required prior to the drop IAW paragraph **1.3.**

2.5.8.4. For training, sea state limits are based on the ability of recovery assets to quickly locate and recover jumpers and their equipment. For contingencies, sea state limits are at the discretion of the jumpmaster. See **Attachment 2** for wind/sea state prediction chart.

2.5.8.5. Unilateral training support requirements for water DZ operations - See AFI 11-410.

2.5.8.6. Approved Flotation Devices. The following guidance applies to military free-fall (MFF) and static line parachutists.

2.5.8.6.1. MFF. For day or night high altitude low opening (HALO)/high altitude high opening (HAHO) operations, US Air Force parachutists will wear AF and/or MAJCOM-approved flotation devices under these circumstances: when directed by AFMAN 11-420(I); when the jumper's planned flight path (from exit to impact point) is over a water obstacle for more than half the planned flight path distance; when a water obstacle is within 1,000 meters of the impact point.

NOTE: A water obstacle is defined as any body of water that has a depth of four feet or more, length and width of more than 40 feet.

2.5.8.6.2. Static Line. USAF parachutists will wear AF and/or MAJCOM-approved flotation devices when a water obstacle is within 1,000 meters of the intended jumper dispersal pattern (CARP to DZ), or when directed by AFMAN 11-411(I).

2.5.9. Tactical DZ. Tactical DZs are primarily used during exercises or contingencies. They provide the supported forces commander with a means to rapidly respond to user requests through the rapid survey/approval process. Tactical DZs are normally restricted to missions supporting actual resupply and personnel infiltration airdrops (versus proficiency jumps, SATBs, etc.). Tactical DZ surveys are done in an abbreviated manner, but still require a physical survey of the DZ, by Special Tactics (ST) combat controllers, Theater Airlift Liaison Officer (TALO), or the supported force, to ensure DZ suitability. A safety-of-flight review is also required.

NOTE: If a tactical DZ survey is done to meet new run-in axis requirements on an existing survey, then only a safety-of-flight review is required. Tactical DZ will not be used for routine or repetitive training.

2.5.10. Special Purpose DZs**.** Special purpose DZs are only approved for use by AF special tactics, combat rescue officers, and pararescue personnel. Training jumps should closely duplicate conditions that could be encountered during operational missions, to include rough terrain, open sea and unfamiliar or unimproved areas. Care will be taken to ensure that all conditions, especially safety-related are identified to the JM and jumpers.

2.5.10.1. Coordination for Use. The OG/CC, or designated representative, will coordinate with agencies exercising control over sites selected for use and will publish directives describing necessary operating instructions including hazards and restrictions. Guidelines for selection and use are listed below:

2.5.10.1.1. Open Field DZ. Caution will be exercised with respect to terrain and obstacles such as runways, lights, high tension lines, rocky terrain, etc., that could be hazardous to jumpers. Hazards must not be located within 100 meters of the center of the DZ (Exception: When conducting runway assault operations and demonstration jumps.).

2.5.10.1.2. Tree Jump DZ. The criteria for selecting open field jumps apply as well to tree jump areas; in addition, they will be selected to be relatively free of stumps and dead falls. Certain trees have hazardous features such as excessive height, sloping branches, or no branches, and should be taken into account when selecting the DZ. Complete tree jump equipment will be worn when conducting intentional tree jumps.

2.5.10.1.3. Mission DZs. The OG/CC, or designated representative, will periodically select unimproved and unfamiliar jump areas for the purpose of conducting operational mission training. Areas selected must meet the above criteria however; shrub brush, thickets, small trees and tundra areas are not considered hazardous to jumpers. Tree stumps that would be considered hazardous will not be located closer than 50 meters from the center of the target. Risk management must be exercised by the JM when conducting operational mission training and an extensive evaluation should be performed prior to deployment.

2.5.10.1.4. Water DZs. Hazardous obstacles such as buoys, channel markers, piers, and shoreline will be at least 400 meters from the center of the target area.

2.6. Instrument Meteorological Condition Airdrops. For U.S. Army training drops, a minimum ceiling of 200 feet above ground level (AGL) is normally required. This may be waived by the supported forces commander/user, but must be identified before the mission is flown. Peacetime airdrops of actual personnel or equipment for unilateral training will not be made when weather conditions over the DZ are less than a 300 foot ceiling and one-half mile visibility. During operational missions, ceiling and visibility minimums are at the discretion of the supported forces commander. For joint exercises, Air Force personnel are authorized to use Army minimums. When the ceiling is less than 600 feet AGL, clear all personnel from the DZ NLT 5 minutes prior to the scheduled airdrop TOT and ensure they remain clear until completion of the airdrop.

2.7. Aerial Power Line Restrictions. For the purpose of this publication, all restrictions apply to aerial power lines operating at 50 volts or greater.

2.7.1. Power lines present a significant hazard to jumpers. Jumpers can sustain life threatening injuries from electric shock and/or falls from a collapsed canopy.

2.7.2. To reduce this hazard, first attempt to site DZs so no power lines are located within 1000 meters of any DZ boundary.

2.7.3. If power lines are located within 1,000 meters of any boundary, coordinate with the Power Company to shut off power NLT 15 minutes prior to TOT.

2.7.4. If power cannot be interrupted, the flying mission commander, aircrew, and jumpmaster must conduct a risk assessment of the mission. Include as a minimum; type jump, jumper experience, aircrew experience, ceiling, and surface/altitude wind limits required to approve, suspend, or cancel the operation. To further minimize risks, consider altering the mission profile to raise/lower drop altitudes, change DZ run-in/escape headings, or remove inexperienced jumpers from the stick. If possible, mark power lines with visual markings (lights, smoke, or VS-17 panels).

WARNING: At no time will military personnel attempt to climb power line poles to position or affix markings to wires or poles.

2.7.5. During USAF MFF operations, aircrews should ensure the Jumpmaster/Team leader is aware when aerial power lines are within 1,000 meters of the intended PI.

2.7.6. Non-USAF personnel will comply with their service guidance for power line procedures and restrictions.

2.8. Airdrop Winds. DZ wind information is critical to airdrop accuracy and is used by aircrews to compute the adjusted release point. It is imperative that accurate and timely wind data be transmitted to the aircrew. This includes not only surface wind and the computed mean effective wind, but also any unusual observations (i.e., wind shear or local phenomena that could affect wind direction, speed or restrictions to visibility).

2.8.1. Surface Wind. The surface wind at the DZ is normally measured using an anemometer or other calibrated wind-measuring device. Wind direction is reported in magnetic degrees and wind speed in knots. The direction reported is the direction the wind is coming from. Surface wind limitations are listed in **Table 2.3.** and **Table 2.4.**

Table 2.3. Surface Wind Limits for CDS/Equipment Airdrops.

TYPE CDS/EQUIPMENT DROP	SURFACE WIND LIMITS (KNOTS)
AF Equipment	17
AF CDS using G-12 parachutes	13
AF CDS using G-13/14 parachutes	20
HAARS, HV CDS, or HSLLADS	No Restriction
AF Training Bundles (SATB)	25
RAMZ Bundles	Dependent on FXC modification
Non-AF Equipment	Discretion of unit DZSO

Table 2.4. Surface Wind Limits for USAF Personnel Airdrops.

TYPE PERSONNEL DROP (See NOTE)	SURFACE WIND LIMITS (KNOTS)
AF Static Line Land / Intentional Tree	13 / 17
AF Static Line Water	25
AF MFF Land / Intentional Tree	18 / 22
AF MFF Water	25
AF Tandem	17
Non-AF Equipment	Discretion of unit DZSO
NOTE: During operational missions/contingencies, the airborne commander and/or team leader will coordinate wind restrictions with the air mission commander/aircraft commander based on operational requirements.	

2.8.2. Mean Effective Wind. The mean effective wind (MEW) is a theoretical wind of constant speed and direction that extends from the ground to a designated altitude. When required, the DZC determines the MEW by timing the ascension of a helium-filled balloon to a pre-determined altitude and measuring the angle of drift. The MEW is an indicator of the drift line and distance an airdropped object can be expected to travel. **Table 2.5.** is used to determine average wind speed from the surface to various drop altitudes.

2.8.2.1. Inflate the 10-gram balloon with helium to a circumference of 57 inches for day and 74 inches for night. This increase in size at night compensates for the weight of a small marking light attached to the balloon.

2.8.2.2. Two types of marking lights can be used. One type is activated by immersion in water prior to attachment to the balloon. The other type is commonly known as a chemical light and measures 6 inches in length.

NOTE: Using a chemical light other than the 6-inch size will result in inaccurate mean effective wind measurement.

2.8.2.3. Once the balloon is released, its ascent to the required altitude is timed. The ascension tables reflect the ascent times required for the balloon to reach various altitudes. This method is also used to estimate the base altitude of cloud layers by determining the ascension time for the balloon until obscured by the cloud base.

2.8.2.4. During ascent, unusual movement by the balloon is indicative of erratic wind conditions and should be noted. The altitude of these occurrences, if significant, should be included in the MEW report to the aircraft.

2.8.2.5. When the balloon reaches drop altitude the elevation angle is measured with a pocket transit, theodolite, clinometer, or any other accurate means available.

2.8.2.6. The magnetic azimuth to the balloon is measured and the reciprocal heading noted. This will give the MEW wind direction.

2.8.2.7. Referring to the scale on the left side of **Table 2.5.**, locate the angle that corresponds to the angle measured. Move horizontally across the table to the vertical column that corresponds to the drop altitude being used. The value at the intersection of these two lines is the MEW wind speed in knots.

Table 2.5. Mean Effective Wind Computation Table (10-Gram Helium Balloon).

Conversion Chart For Elevation Changes To Wind Speed In Knots

Day Circumference: 57”, Night Circumference: 74”

DROP ALTITUDE IN FEET

		500	750	1000	1250	1500	1750	2000	2500	3000	3500	4000	4500	ASCENSION TABLE	
ELEVATION ANGLES	70	02	02	01	01	01	01	01	01	01	01	01	01		
	60	03	02	02	02	02	02	02	02	02	02	02	02		
	55	03	03	03	03	03	03	03	03	03	03	03	03	TIME	ALT (FT)
	50	04	04	03	03	03	03	03	03	03	03	03	03	0:10	80
	45	05	04	04	04	04	04	04	04	04	04	04	04	0:20	170
	40	06	05	05	05	05	05	05	04	04	04	04	04	0:30	250
	35	07	06	06	06	06	05	05	05	05	05	05	05	0:40	330
	30	08	07	07	07	07	07	07	07	06	06	06	06	0:50	400
	25	10	09	09	09	08	08	08	08	08	08	08	08	1:02	500
	24	11	10	09	09	09	09	08	08	08	08	08	08	1:10	540
	23	11	10	10	09	09	09	09	08	08	08	08	08	1:20	610
	22	12	11	10	10	10	10	09	09	09	09	09	09	1:30	670
	21	12	11	11	10	10	10	10	10	10	10	10	10	1:43	750
	20	13	12	11	11	11	11	11	10	10	10	10	10	1:50	790
	19	14	13	12	12	11	11	11	11	11	11	11	11	2:25	1000
	18	15	13	13	12	12	12	12	12	11	11	11	11	2:44	1100
	17	16	14	13	13	13	13	12	12	12	12	12	12	3:05	1250
	16	17	15	14	14	14	13	13	13	13	13	13	13	3:49	1500
	15	18	16	15	15	14	14	14	14	14	14	14	14	4:30	1750
	14	19	17	16	16	16	15	15	15	15	15	15	15	5:11	2000
	13	21	19	18	17	17	17	17	17	17	17	17	17	6:34	2500
	12	22	20	19	19	18	18	18	18	17	17	17	17	7:58	3000
	11	24	22	21	21	20	20	20	19	19	19	19	19	9:22	3500
	10	27	25	23	23	22	22	22	21	21	21	21	21	10:44	4000
	09	30	27	26	26	25	24	24	24	23	23	23	23	12:08	4500

WIND SPEED IN KNOTS (10 GRAM BALLOON)

2.8.2.8. When transmitting the MEW, make sure it is identified as the "mean effective wind" and the altitude to which it was taken is included. Phraseology: "TALON ZERO ONE, MEAN EFFECTIVE WIND AT (DROP ALTITUDE AGL), ESTIMATED THREE FIVE ZERO AT ONE NINER."

2.8.2.8.1. Indication of erratic winds or wind shear should be reported at that time.

2.8.3. Altitude Winds. There are no altitude wind restrictions for fixed wing airdrops. Refer to the appropriate MDS-specific aircraft AFI for altitude wind restrictions for rotary wing aircraft. If surface winds are not provided, altitude winds may influence the jumpmaster's decision to drop personnel.

2.9. Drop Zone Markings. A marked DZ is defined as a DZ that has a PI or release point marked with a pre-coordinated visual or electronic signal. Standard DZs may be marked with raised angle markers (RAM), VS-17 marker panels, visible lighting systems, and light beacons. Virtually any type of lighting or visual marking system is acceptable if all participating units are briefed and concur. Night markings or visual acquisition aids may include a light gun, flares, fire pots, railroad fusees, flashlights, chemlights, and infrared (IR) lighting systems. Electronic NAVAID markings (ZM, SST-181, GAR-I, Tactical Aid to Navigation (TACAN), etc.) may be used for either day or night operations and placed as directed by mission requirements.

NOTE: For C-17 operations, all Point-of-Impact (PI) coordinates, if different than planned, must be relayed to the aircrew no later than 15 minutes prior to the time over target (TOT).

2.10. Standard Drop Zone Markings (Not required for AFSOC assigned/gained, aircraft OPCON to USSOCOM, or a theater special operations command).

2.10.1. During day operations, the PI will be marked with a RAM or block letter. If authentication is required, a block letter will be used instead of the RAM. Authorized letters for PI markings are A, C, J, R, and S. The block letters H and O are authorized for circular DZs. The block letters should be aligned with the surveyed DZ axis or with the aircraft line-of-flight, if different from the survey. The minimum size for block letters is 35 feet by 35 feet (11 meters by 11 meters) and consists of at least nine marker panels (**Figure 2.3.**).

2.10.2. During night operations, the PI will be marked with a block letter. The apex of the block letter will be located on the PI. The minimum size for block letters is 35 feet by 35 feet (11 meters by 11 meters) and consists of at least nine white lights, with a recommended minimum output rating of 15 candela. When flanker lights are used, they will be white and located 250 meters left and right abeam the PI, unless precluded by obstacles or obstructions. If 250 meters is not used the aircrew will be briefed. A trailing edge beacon may be used during actual personnel airdrops. When used, the amber trailing edge beacon will be placed along the surveyed DZ centerline 1,000 meters from the PI, or at the DZ trailing edge, which ever is closer to the PI. During pre-mission coordination for personnel drops, aircrews will identify to the DZC their trailing edge beacon requirements. For all airdrops, the DZ identification must be coordinated and briefed to the ground party and aircrews (**Figure 2.3.**).

2.10.3. IR lighting systems. When mission requirements dictate and aircrews are trained, equipped, and qualified, IR lights may be substituted for overt lights using the DZ marking patterns specified in paragraph **2.10.2.**

Figure 2.3. Standard Drop Zone Markings.

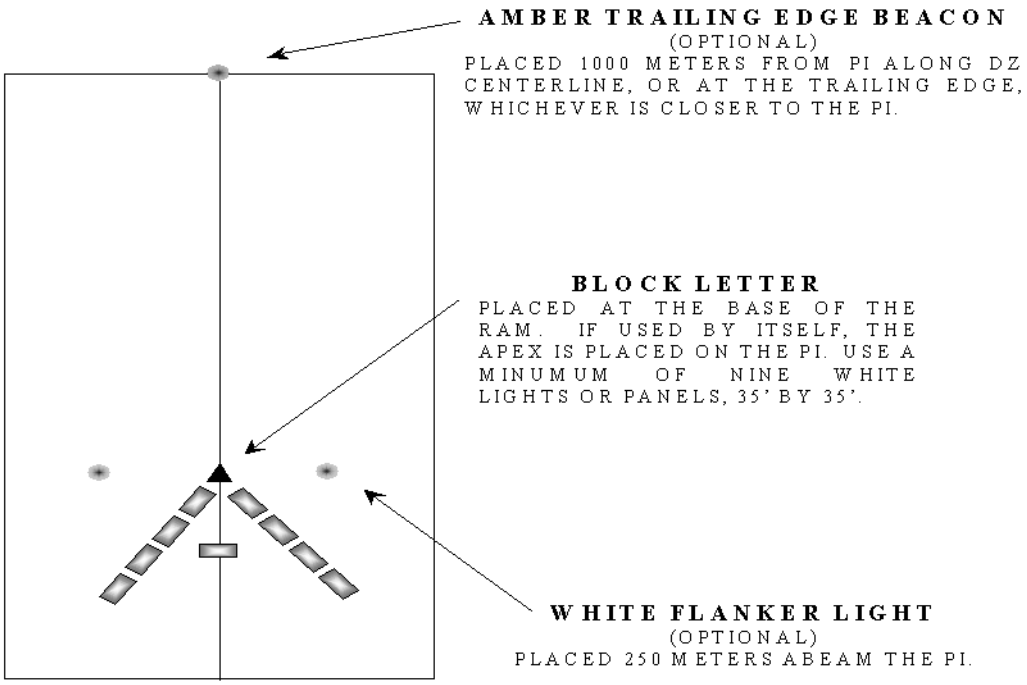

2.11. Non-Standard Drop Zone Markings (Primary for AFSOC assigned/gained, aircraft OPCON to USSOCOM, or a theater special operations command).

2.11.1. The tactical situation may dictate the use of nonstandard DZ markings. When nonstandard markings or identification procedures are used, it is imperative that all appropriate participants be thoroughly briefed.

2.11.2. Unmarked DZ. This type of DZ is not authenticated with any type of visual or electronic marking. Unmarked DZs are normally used for contingency operations and may not have a DZ party present. Combat control, pararescue personnel, and USSOCOM assigned forces are authorized to drop on unmarked DZs. During training missions, a DZC party must be on site for safety.

2.11.3. MFF DZ Markings. The two DZ marking systems commonly used during MFF operations are the wind arrow and the two-light system (**Figure 2.4.**).

2.11.3.1. Wind Arrow. The arrow is formed by placing visual markers on the ground in the shape of an arrowhead. Align the arrow pointing into the wind. Place the arrow tip marker on the desired impact point. Jumpers fly their approach to land facing the direction of the arrow.

2.11.3.2. Two-Light System. The two-light system consists of one red light and one green light. The red light is placed on the desired impact point and the green light is placed between 15 and 50 meters downwind. Jumpers will be briefed on the actual separation of lights. Jumpers fly their approach to landing from green light to red light.

Figure 2.4. Military Free-Fall Drop Zone Markings.

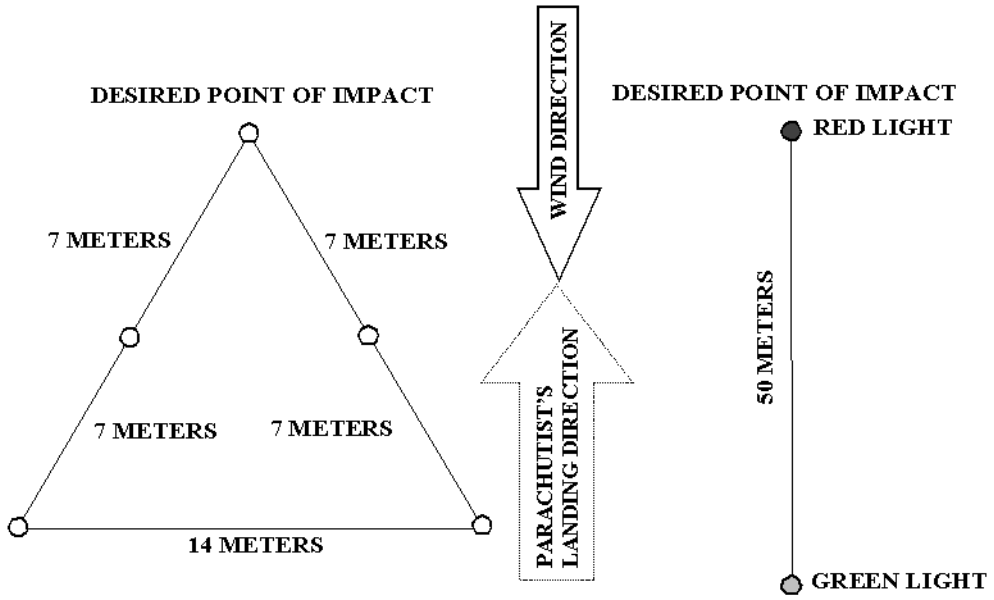

2.11.4. Water DZ. Water drops can be conducted on marked or unmarked DZs. Marked DZs will have mutually agreed upon markings (visual or electronic). Select markings that do not mimic local maritime navigational aids (buoys, channel markers, etc.).

2.11.4.1. Marked Water DZ. GMRS, VIRS, CARP, or JMD (including moving target) procedures may be used on marked DZ. For GMRS, the position of the recovery or safety boat usually marks the intended release point. For water JMD drops, use moving target procedures (**Figure 2.5.**). Other options may be used to mark DZ; however, these markings must be pre-briefed.

2.11.4.2. Unmarked Water DZ. Unmarked water DZs will have predetermined PIs. Include coordinates of the PI in the aircrew, DZC and jumpmaster briefings.

2.11.5. Single Marked Multiple Points of Impact (MPI). Single marked MPI procedures are authorized for Heavy Equipment/Container Delivery System (HE/CDS) airdrops where only the first PI in a series of MPI is marked and all personnel involved have been properly briefed. Single -marked MPI are restricted to along the DZ axis (no lateral displacement) and to a maximum of 1500 yards between the first marked PI and the last unmarked PI. The DZ must meet the minimum size requirements for each PI and the precise location of each PI must be provided to aircrews (see **Table 2.1.** and **Table 2.2.**).

Figure 2.5. Jumpmaster Directed Airdrop, Moving Target Procedures.

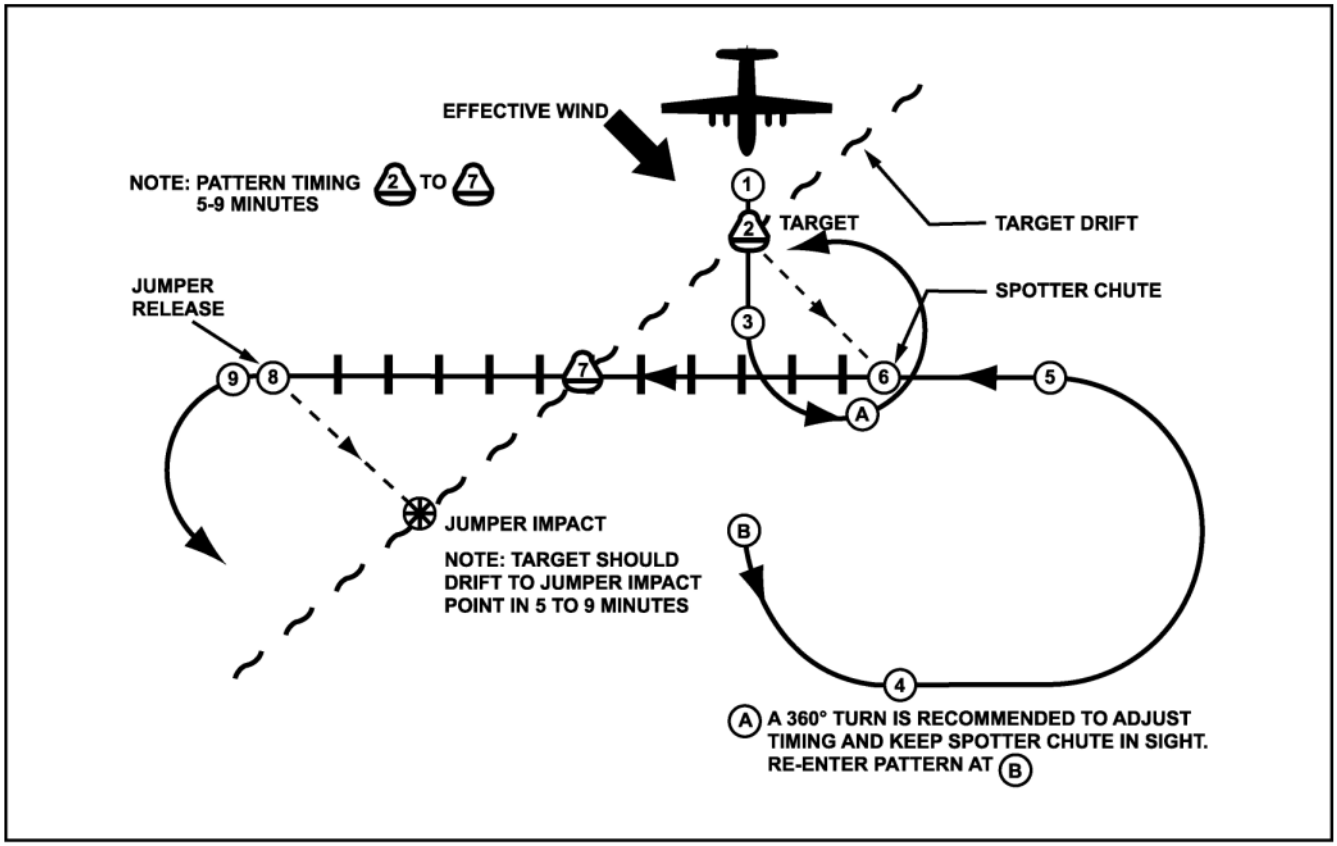

MOVING TARGET PROCEDURES.

1. Step 1. Head directly toward the target, regardless of the wind direction.

2. Step 2. Release the spotter chute or wind drift indicator (WDI) directly over the target.

3. Step 3. Immediately upon release, make a left/right hand turn (see item A) to observe the descent and position of the spotter chute/WDI.

4. Step 4. Establish rectangular drop pattern oriented so the final approach will be aligned with the spotter chute/WDI and the target, respectively. The pattern should be adjusted so that the aircraft will be over the target five to nine minutes after the spotter chute/WDI is deployed.

5. Step 5. Turn on approach. Make minor changes in heading to pass over the spotter chute/WDI and the target on a direct line. Aircraft drift correction should be established prior to passing over the spotter chute/WDI.

6. Step 6. Initiate a uniform count over the spotter chute/WDI.

7. Step 7. Reverse count over the target.

8. Step 8. Deploy jumpers when the last digit in reverse count is reached.

9. Step 9. After the jumper clears the aircraft, turn to observe the accuracy of the drop.

10. Deploy additional jumpers using the drop heading and count established in steps 5, 6, and 7.

11. Disregard the spotter chute/WDI for subsequent passes.

Figure 2.5. Jumpmaster Directed Airdrop, Moving Target Procedures (continued).

1. When the target drift rate is changed (drogue chute is installed on target, no wind shift occurs, etc.) the entire spotter chute/WDI procedure must be re-accomplished and a new drop heading and count established starting with step 1.

MOVING TARGET PATTERN. Deployment procedures to a moving target are similar to those employed for a stationary target. The moving target procedures takes into consideration target drift and will place the team on the downdrift line of the moving target and not necessarily on target. Special attention should be paid to the following items:

1. The pattern must be adjusted so that the initial pass over the target after spotter chute/WDI deployment is not less than 5 minutes and not more than 9 minutes, 7 minutes being ideal. If the initial pattern requires more than 9 minutes, the team will be too far downdrift/downwind and with a high target drift rate may not be able to locate the target visually.

2. On the initial pass after the spotter chute/WDI deployment, an accurate count can be obtained by the JM and the heading noted by both the JM and pilot. All subsequent passes will be made on this initial heading using the count obtained on the first pass. No attempt should be made to recheck the count or change the initial heading because the target will have drifted.

NOTE: On subsequent passes requiring a change of heading to place the aircraft over the target, ensure the pilot corrects back to original heading. Moving target procedures are normally conducted from fixed-wing aircraft.

2.12. Airdrop Communications. To the maximum extent possible, airdrop operations should be planned to operate with minimum radio transmissions. In general, all missions are flown as planned with additional radio calls made “by exception” only. Authentication is accomplished as required. Detailed mission planning and pre-briefed operating procedures can eliminate many flight-following and formation-only transmissions. Radio contact with the drop aircraft should be limited to safety of flight requirements or issues affecting airborne force employment. This includes ATC directions, range clearance, unsafe surface conditions or mission changes. DZ winds or other information may be broadcast in the blind at a coordinated time prior to the scheduled TOT.

2.12.1. Drop clearance to a marked DZ is normally inherent with mission clearance and is confirmed by the aircrew observing the pre-briefed visual DZ markings. Unless radio communications are specifically required, any coordinated markings, other than red smoke, red flares, or red lights indicate a clearance to drop.

NOTE: During NVG operations colored flares may still be used, but due to the delay in aircrew recognition of color, star clusters or other obvious signals are recommended.

2.12.2. Training airdrops (both unilateral and joint) conducted during IMC or to an unmarked DZ require the DZC to relay drop clearance, (i.e., “Cleared to Drop”), to the aircraft by way of radio communications or other pre-briefed method. Drop clearance is usually accomplished a minimum of 2 minutes prior to the scheduled TOT.

2.12.3. Mission clearance provides drop clearance on operational missions to DZs where no reception party is present.

2.12.4. No-Drop Signals. A “NO-DROP” condition, closing of the DZ, or temporary closing of the DZ will be indicated in one of the following ways: an authenticated radio transmission, red smoke, red flares, red lights, scrambled panels, or another planned signal.

NOTE: During NVG operations colored flares may still be used, but due to the delay in aircrew recognition of color, star clusters or other obvious signals are recommended.

2.12.4.1. A “NO-DROP” situation during IMC operations will be indicated by the absence of pre-briefed electronic device(s), or an authenticated radio transmission.

2.12.4.2. Use standard no-drop signals to communicate temporary closing of a drop zone or postponement of an airdrop. Aircrew should follow up with a radio call to the appropriate C2 facility as the situation dictates.

2.12.5. When using radio communications, the following procedures apply:

2.12.5.1. “NO DROP” advisories should be transmitted early enough to allow time for authentication; specifically, not later than 1 minute prior to actual TOT, unless an emergency arises.

2.12.5.2. If last minute conditions preclude a safe drop and time for proper authentication is not available, the DZC will immediately and repetitively transmit cancellation of drop clearance, “NO-DROP, NO-DROP, NO-DROP.”

2.12.6. Authorized Relays:

2.12.6.1. Relay operational information to the aircraft as requested when abnormal conditions necessitate such requests. DZCs should not be required to handle such messages on a regular basis.

2.12.6.2. If necessary, inform the aircraft of the source of any messages being relayed (DZSO, DZC, ground forces commander, etc.).

2.12.6.3. Transmitting the reason for an aircrew initiated “NO-DROP” is not normally required. However, if time permits, the aircrew will pass the information to the DZC. For a ground initiated “NO-DROP” (if time and security requirements permit) the DZC will inform the aircrew of the reason and should coordinate any further action.

2.12.6.4. During airborne operations, the ground forces commander may need to determine the number of personnel who did not jump (alibi jumpers) to properly account for all personnel. When requested by the DZSO/DZ Support Team Leader (DZSTL), if the tactical situation permits, the DZC obtains the total number of jumpers remaining on board from the aircrew. This should not be accomplished until after the last aircraft over-flies the DZ and at no time if it compromises safety or conflicts with aircrew or DZC duties. Should such a conflict occur, delay or cancel transmissions accordingly.

2.12.7. Unauthorized Relays. Radio calls to determine order of flight, load information, and administrative details are normally not authorized.

2.12.8. Only qualified DZ personnel will operate DZ communication equipment.

2.13. Control Point Location. The DZC establishes the control point taking into account pertinent factors such as an unobstructed line of sight, winds, positive control of the DZ, surrounding airspace, and security requirements. Safety factors must always be considered when choosing a control point location.

During actual IMC, HV CDS or HAARS, locate the control point off the DZ. The control point for multi-ship HE and all CDS equipment airdrops will be offset a minimum of 300 yards (HE) and 200 yards (CDS) from the intended PI.

2.14. En Route and Terminal NAVAIDS. A variety of electronic NAVAIDS are available to support drop zone operations including the TACAN, ZM, or radar beacons. These NAVAIDS are utilized at the discretion of the JFACC, JFSOCC, or mission commander.

2.14.1. For airdrops, the normal placement for NAVAIDS is as follows:

2.14.1.1. The ZM (TPN-27) should be placed within 1,500 yards of the PI. For maximum accuracy, the ZM should be as close to the PI as possible. If line-of-sight considerations preclude placement of the ZM at the briefed location, relocate it and advise the aircraft on initial contact of the new location relative to the PI.

2.14.1.1.1. During night airdrop operations, the ZM should be visually marked with a light to identify it as a hazard to parachutists and to prevent accidental destruction of the ZM by vehicular traffic.

2.14.1.2. Radar Beacon Operations. Special Tactics units maintain several different radar beacon systems to include the SST 181, SMP 1000, and PPN-19. Pre-briefed/pre-coordinated beacon use is required to ensure the proper beacon at the proper setting is established.

2.14.1.2.1. For CARP airdrops, compute the wind drift distance for the load being dropped and displace the beacons the computed distance and direction into the wind from the PI.

2.14.1.2.2. For MFF airdrops, the beacons will be placed on the PI.

2.14.1.2.3. The TACAN should not be placed on a DZ as an airdrop aid.

2.15. Ground Marked Release System. When controlling an airdrop, the DZC can mark a point on the ground with a visual signal to designate the computed Release Point (RP) to the aircrew. This signal may be a four marker “L”, six marker “T”, or seven marker “H” and is placed abeam, and 100 meters (110 yds) left of the desired release point as depicted in **Figure 2.6.** The drop is executed when the aircraft is directly abeam, and 100 meters (110 yds.) right of this marker on the pre-briefed inbound heading. A pre-briefed code signal or beacon may be collocated with the markers to aid in DZ identification.

Figure 2.6. Ground Marked Release System Day and Night Markings.

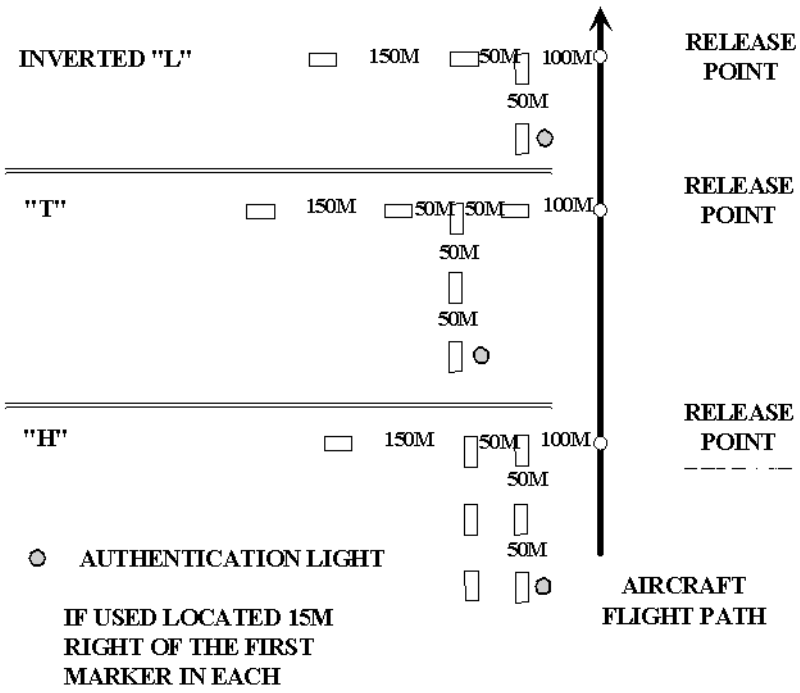

2.15.1. Marking Considerations:

2.15.1.1. The DZ markings must be clearly visible to the aircrew on approach as early as possible. If conditions preclude placing the markings at the computed point, the DZC may have to adjust the location of the intended PI, ensuring compliance with the requirements in **Table 2.1.**, **Table 2.2.**, and **Figure 2.1.**, **Figure 2.3.**, **Figure 2.4.**, **Figure 2.5.** Advise both the aircrew and user of the change in PI location.

2.15.1.2. When conducting operations requiring security, night DZ markings should be visible only from the direction of the aircraft's approach. If flashlights are used, they should be equipped with simple hoods or shields and aimed toward the approaching aircraft. Omnidirectional lights, fires, or improvised flares may be screened on three sides or placed in pits with the sides sloping toward the direction of approach.

2.15.1.3. During daylight airdrops, the marker panels should be slanted at a 45-degree angle from the surface toward the aircraft approach path to increase the aircrew's ability to see them. If security permits, smoke (other than red) may be displayed at the release point or corner marker to assist in aircrew DZ acquisition.

2.15.2. Determining PI Location.

2.15.2.1. After selecting the DZ, calculate the dispersion distance, as stated below, and then select a PI that is compatible with the calculated point and the tactical situation. Once the PI has been determined, calculate the forward throw distance and wind drift effect to determine the release point.

2.15.2.2. Dispersion distance is defined as the total distance within the impact area where troops or cargo will land. It is in a direct line with the aircraft's line of flight and is dependent upon aircraft speed and load exit time (the length of time required for the first through the last object to clear the aircraft). The formula for calculating dispersion is; ½S x E = L, where S = aircraft speed in knots, E = exit time in seconds, and L = length of dispersion in yards. This calculation is normally used to help in placing the PI, rather than determining the release point.

2.15.2.3. Wind drift is defined as the lateral movement of a parachute through the air caused by the wind. The distance of the wind drift is measured on a direct line from the parachute's fully deployed opening point to its actual point of impact on the ground. This drift is calculated using the formula; D = KAV, where D = drift in yards, K = the load drift constant, A = drop altitude in hundreds of feet) i.e., (1,000 feet = 10), and V = wind velocity in knots. **Table 2.6.** depicts the constants for different airdrop loads.

2.15.2.4. Forward throw distance is the distance along the aircraft flight path traveled by a parachutist or cargo container after exiting the aircraft, until the parachute fully opens and the load is descending vertically (**Table 2.7.**).

Table 2.6. Ground Marked Release System Load Drift Constants (K).

TYPE DROP	K (Load Drift Constant)
Personnel (Static Line)	3.0
Heavy Equipment	1.5
CDS/CRL/CRS	1.5
Door Bundle	1.5
SATB	2.4

Table 2.7. Ground Marked Release System Forward Throw Distance Data.

TYPE DROP	C-130	C-17	C-141	C-5
Personnel (Static Line) / Door Bundle	250 yds (229 m)	250 yds (229 m)	250 yds (229 m)	250 yds (229 m)
Personnel (MFF)	328 yds (300 m)	328 yds (300 m)	328 yds (300 m)	328 yds (300 m)
Heavy Equipment	500 yds (458 m)	700 yds (640 m)	730 yds (668 m)	730 yds (668 m)
CDS/CRS/CRL	550 yds (503m)	725 yds (663 m)	750 yds (686 m)	N/A
SATB	160 yds (147m)	N/A	160 yds (147m)	N/A

2.15.2.5. Offset is defined as the distance the aircraft will fly to the right of the marker (100 meters) so the markers will remain visible to the aircrew.

2.15.3. Ground Marked Release System (GMRS) marking placement procedures:

2.15.3.1. Stand on the PI facing directly into the wind.

2.15.3.2. Pace off into the wind the distance calculated for wind drift.

2.15.3.3. Face toward the direction from which the aircraft will approach (reciprocal of DZ axis).

2.15.3.4. Pace off the distance calculated for forward travel distance. This is the actual release point.

2.15.3.5. Turn 90 degrees to the right and pace off 100 meters (110 yards for the offset). Place the corner or first panel at this point.

2.15.3.6. Establish the ground markings as shown in **Figure 2.6.**

2.16. Verbal Initiated Release System. CCT and pararescue personnel use this procedure when normal drop procedures are not tactically feasible. The ground party determines the desired release point, gives verbal steering guidance to the pilot to align the aircraft over that point, and then initiates the release. Instructions transmitted to the aircraft must be concise.

2.16.1. Transmit “Turn Left” or “Turn Right” to align aircraft on desired inbound heading.

2.16.2. Transmit “Stop Turn” after alignment instructions when aircraft is on course.

2.16.3. Transmit “Standby” to the aircraft approximately 5 seconds prior to the release point.

2.16.4. Transmit “Execute, Execute, Execute” when the aircraft reaches the release point. Upon hearing the first "Execute", the navigator/pilot not flying calls "Green Light."

2.17. Drop Zone Personnel. The DZ Controller (DZC) is normally a USAF combat controller (E-4 or above with a five skill level or higher) certified by the unit commander. Combat controllers are authorized to control all airdrops for any US or allied military force.

NOTE: Pararescue personnel and ST assigned combat weatherman are authorized to act as DZC for unilateral AF and foreign national pararescue operations in which pararescue is the controlling agency. DZC training and certification for rescue parachute deployments may be accomplished by qualified pararescue trainers/task certifiers and certified by letter by the unit commander.

2.17.1. The primary method of certification is to complete the HQ AFSOC DZC formal lesson plan and instruction by a qualified combat controller, DZC certified rated officer aircrew member (including TALOs), unit certified DZC personnel, or a sister service Drop Zone Support Team (DZST) IAW **2.17.4.** All Air Force DZCs, other than combat control personnel and TALOs, will be trained to attain proficiency (academic training and practical training involving day and night DZ operations) in DZC responsibilities, duties, and DZ establishment as outlined in this instruction and operations support squadron training procedures. Certification will be validated in a memorandum signed by the operations group commander (OG/CC) and maintained at the group tactics office. Air Force aircrew members functioning as DZCs are restricted to a 12-hour duty day waiverable to 16 hours by the OG/CC or higher (not applicable to AFRC crewmembers). The alternate method of DZC certification is to complete the training IAW the HQ AFSOC lesson plan provided by a qualified combat controller. However, due to the high ops tempo of special tactics teams, scheduling training through a special tactics squadron may require extensive lead time between the coordination process and the actual training commence date. The HQ AFSOC DZC lesson plan can be accessed through a link on the AMC ZAR web-site at: **https://www.amc.scott.af.mil/do/dok/zar.htm**.

NOTE: Authorized personnel other than qualified combat controllers and DZC certified rated officer aircrew members (including TALOs) are restricted to formation airdrops of four or less aircraft unless on a military range with active range control.

2.17.2. U.S. Air Force other than ST personnel.

2.17.2.1. Theater Airlift Liaison Officers (TALO). TALOs qualified IAW AMCI 13-101, *AMC Theater Airlift Liaison Officers,* may perform DZC duties during joint and unilateral airdrops.

2.17.2.2. The OG/CC may approve active duty, ANG, AFRC members, and civilian contract personnel to perform DZC duties on their local drop zones during unilateral training airdrops. The OG/CC should utilize air operations oriented personnel to act as DZCs. Although not all encompassing, aircrew, air traffic control, aerial delivery support, pararescue, and jumpmasters (currently on jump status) are some of the AF specialties/qualifications that are routinely involved in air operations. See MAJCOM guidance for additional DZC eligibility and restriction criteria. Individuals may be certified after completion of the required training listed in paragraph **2.17.1.**

2.17.3. Other DoD Authorized DZC Personnel.

2.17.3.1. Civilian contract personnel must complete the HQ AFSOC formal lesson plan and receive instruction IAW paragraph **2.17.1.** before they are authorized to control airdrop operations.

2.17.3.2. U.S. Special Operations Command (USSOCOM) units. In addition to Air Force ST units, the following USSOCOM units have qualified personnel that may perform DZC duties during joint and unilateral training.

2.17.3.2.1. U.S. Navy Sea Air Land teams and Explosive Ordinance Disposal units.

2.17.3.2.2. U.S. Army Special Forces and Rangers.

2.17.4. Drop Zone Support Team (DZST) Personnel. DZSTs are qualified IAW the Memorandum of Agreement (MOA), “Airdrop Operations Without Air Force Combat Control,” and unit standard operating procedures implementing this MOA.

2.17.4.1. U.S. Army/Marine Corps DZST personnel may perform DZC duties during joint and unilateral Air Force training airdrops.

2.17.4.2. DZST controlled missions must have a qualified Drop Zone Support Team Leader (DZSTL) in charge of DZ operations.

2.18. Drop Zone Controller Responsibilities.

2.18.1. The DZC represents the appropriate commander as provided in the mission directive.

2.18.2. The DZC ensures that adequate medical and evacuation coverage is available prior to personnel airdrops.

2.18.3. The DZC observes and evaluates:

2.18.3.1. All factors that may adversely affect the safety of the operation and ensures transmission of weather information when required.

2.18.3.2. Condition of the DZ prior to the airdrop.

2.18.3.3. Placement of personnel and equipment on the DZ. Only designated vehicles and personnel will remain on the DZ. Recovery and medical personnel and equipment must be positioned so

that constant contact is maintained with the DZC. During joint operations, the DZC and the DZSO are responsible for their respective equipment and personnel.

NOTE: For actual equipment or personnel airdrops, if the ceiling is less than 600 feet, direct all personnel and equipment off the DZ to ensure safety.

2.18.3.4. The operation of other aircraft that could endanger the drop aircraft, equipment load, or parachutists.

2.18.3.5. The DZC should have immediate access to ground-to-air communications equipment or sufficient signaling aids to operate the DZ. Ground-to-air communication is required for IMC airdrops.

2.18.3.6. The DZC insures non-DZC personnel are aware of the “NO DROP” signal in order to prevent an inadvertent signal to the aircraft.

2.18.4. In the event conditions are unsafe for airdrop operations, the DZC ensures that:

2.18.4.1. "NO DROP” signals are displayed on the DZ.

2.18.4.2. “NO DROP” or drop cancellation information is transmitted to the aircraft (see paragraphs **2.12.4.** and **2.12.5.**).

2.18.4.3. A drop is canceled when advised by the DZSO. During a joint mission, the DZSO is responsible for evaluating the winds and surface conditions for an airdrop operation. When only AF personnel are involved, it is the responsibility of the DZC to cancel the airdrop when conditions are unsafe.

2.18.4.4. Ensures necessary reports to include AF Form 4304, **Drop Zone / Landing Zone Control Log** (**Attachment 7**), are properly filled out and submitted to the appropriate agencies.

2.19. Drop Zone Safety Officer. During training operations, the airdropped force furnishes the Drop Zone Safety Officer (DZSO) who in turn is responsible for the following functions (DZC/DZSO duties may be combined during unilateral AF operations):

2.19.1. Ensuring adequate medical coverage is available at the DZ prior to any joint service personnel drops. The supported unit normally provides medical coverage for itself and Air Force parachutists during joint operations.

2.19.2. Clearing the DZ of all personnel and equipment not required for control.

2.19.3. Determining when surface conditions (i.e., winds, vehicles, etc.) on the DZ are hazardous to airborne operations, making the decision to proceed with, suspend or cancel airdrops, and informing the DZC not later than 2 minutes prior to the drop. Airdrops are not suspended or canceled based solely on aircraft alignment with the DZ.

2.19.4. Coordinating all no-drop actions with the DZC.

2.19.5. Ensures the conditions of the DZ will not affect operations or recovery of air items.

2.19.6. Ensures the DZ meets operational and safety criteria for the type airdrop operations being conducted.

2.20. Drop Zone Scoring. Drop scoring is the responsibility of the DZC.

2.20.1. Strike Reports. The strike report reflects the circular error (CE) or the distance that the first object (or parachutist) lands from the PI. Strike reports are given in yards or meters and relative clock position from the PI with 12 o'clock as the relative DZ axis heading.

2.20.1.1. Score object impacting within a 25-yard radius of the PI as a "PI".

2.20.1.2. Score the accuracy of mass airdrops during joint training, exercises, SOF standardization / evaluations, and high velocity airdrops as "Satisfactory" if 90 percent or more of all airdropped personnel or equipment lands within the boundaries of the DZ. Score these drops as "Unsatisfactory" if less than 90 percent lands within these boundaries. Mass airdrops for personnel are considered approximately brigade size or larger. Both personnel and equipment airdrops may be scored using mass airdrop criteria if the accuracy is indeterminable.

2.20.1.3. MFF Airdrops. Do not score MFF airdrops. Annotate actual TOTs and information relevant to any mishap or off-DZ drops.

NOTE: Waivered DZ drops are scored based on the AF minimum DZ size criteria. For example, a waivered DZ is 100 yards short of AF minimum size. The drop is considered on the DZ if personnel/ equipment land within the 100-yard difference between the minimum and waivered DZ boundaries.

2.20.2. Scoring Methods. There are three methods to score airdrops, and they are listed by preference.

NOTE: Score only the first load/parachutist exiting from each aircraft.

2.20.2.1. Measuring. The distance from the PI to the load is measured when precise scores are required. The distance is measured using a precision measuring device (odometer, pre-measured length of cord, measuring tapes, cyclometer, GPS, etc.).

2.20.2.2. Pacing. Score is measured by physically pacing the distance from the PI to the place where the parachutist or equipment load landed.

2.20.2.3. Estimating. Used when there is insufficient time or personnel to pace. The distance from the PI to the load is visually estimated. To assist in scoring by this method, markers (visible from the PI) may be placed at desired locations from the PI at the 3, 6, 9, and 12 o'clock positions. If the markers are used, indicate this to the aircrew.

2.21. Off Drop Zone Reporting Procedures. In addition to the paragraphs below, users will refer to AFJ 13-210(I), *Joint Airdrop Inspection Records, Malfunction Investigations, and Activity Reporting*.

2.21.1. When an off DZ airdrop has been confirmed or suspected, the aircrew involved will not attempt another drop for the remainder of the mission. In the case of an off DZ drop involving injury or death to personnel, the mission will be terminated and the aircraft will land as soon as possible. Retain all paperwork involved in the flight to aid in the investigation. Aircrews will immediately report information regarding off DZ airdrops to a USAF Command Post. Unit safety offices will be notified as soon as possible. Off DZ mishaps resulting in death or serious injury shall be referred to safety and accident investigation boards convened under the appropriate regulations.

2.21.2. Units with DZC/DZSO/DZST responsibilities will develop local procedures and communications processes to obtain emergency assistance to preserve life and limb, secure the site, and notify the airlift and user's chain of command. The first notification step should be through the airdrop aircraft for relay to a USAF command post. Alternative means may include relay through any local US mili-

tary installation. Local installations may also be able to assist with emergency response resources including, aircraft rescue and fire fighting, law enforcement, and public affairs.

2.21.3. The aircrew's OG/CC, or equivalent, shall appoint an aerial delivery review panel to investigate all off DZ airdrops. However, when performing off-station airdrop missions at an Air Force Base with airdrop expertise (e.g. Pope AFB), the aircrew's OG/CC may authorize the host unit OG/CC to perform the aerial delivery review panel IAW paragraph **2.21.5.** Panel members should include the Operations Support Squadron (OSS) chief of tactics (chairperson); a tactics pilot, navigator, and loadmaster; a stan/eval pilot, navigator, and loadmaster; airdrop inspector loadmaster, flying safety officer, and crewmembers from the incident. The chairperson may modify panel composition based on the nature of the situation under review.

2.21.4. The Flying Safety Officer will determine if the airdrop incident is reportable in accordance with AFI 91-204, *Safety Investigations and Reports*. The aerial delivery review panel will be prepared to provide information requested for a safety investigation and report, if warranted. Normally, the Air Force reports injuries and damage to their own personnel and equipment. Other military services report injuries and damage to their own personnel and equipment. The Air Force takes part in these investigations when requested by the other service.

2.21.5. Convene an aerial delivery review panel no later than the next duty day after the airdrop if the incident occurs in the local area. However, if the incident occurs away from home station at a location without Air Force airdrop expertise, convene the panel within 5 duty days (10 days for ANG and AFRC units) after the aircrew returns to home station. Unit commanders will ensure aircrew members involved in an off DZ airdrop are not scheduled for any event that would delay convening an aerial delivery review panel or for another airdrop until the incident is resolved. Upon completion of the aerial delivery review panel, the chairperson will submit recommendations to the OG/CC; if the option listed in paragraph **2.21.3.** is used, then the host unit OG/CC will inform the aircrew's OG/CC of the panel's recommendations. The OG/CC will make the final determination regarding any panel recommended actions.

2.21.6. HQ AMC/DOKT will be the repository for all Air Force off DZ reports. AMC units will send the results of their delivery review panel by memorandum, message, or e-mail to HQ AMC/DOKT within three duty days after the panel convenes. Non-AMC units will forward their report to AMC/DOKT through their MAJCOMs NLT 30 calendar days after the incident. If the aerial delivery review panel judges the incident to be of immediate interest to other airdrop units, send an immediate message outlining significant details and recommendations to HQ AMC/DOKT with an information copy to the parent numbered Air Force (NAF).

2.21.7. As a minimum, the delivery review panel results will include the following information in their final report: date of incident, type aircraft, unit, type load, DZ name and location, type drop (SKE, Visual, or Computer Drop), day/night, formation position, drop score (clock position and distance), and surface winds. The report will also include causes and recommendations. After collecting all Air Force off DZ reports, HQ AMC/DOKT will provide a yearly off DZ Crosstell Report. This report will be due to AMC/DO by 31 Jan every calendar year.

2.22. Drop Zone Surveys.

2.22.1. USAF aircrews require a DZ survey for training airdrop missions involving US personnel and/or equipment. Completing the DZ survey process involves both a physical inspection of the DZ,

and documenting the information on AF Form 3823, **Drop Zone Survey**. Surveys may be accomplished by the unit whose equipment or personnel are being airdropped. For exercises and joint training operations, users must ensure the survey is completed and meets the appropriate criteria for operational and safety standards. If requesting ST combat controllers to conduct the survey IAW paragraph **1.4.**, the user should identify this requirement during the initial planning conference but no later than the middle planning conference. The user must conduct a physical inspection of the DZ prior to use to identify and evaluate potential hazards to airdropped personnel/equipment, man-made or natural structures, and ground personnel. The nearest group tactics office will perform the safety-of-flight review to ensure there are no obstructions prohibiting over-flight. If the survey was conducted using any other method than GPS-derived coordinates, provide the safety-of-flight reviewer with the raw coordinate data and the method of conversion. If a DZ survey is done on an existing surveyed DZ to meet new run-in axis requirements for a particular mission, only a safety-of-flight review is required.

2.22.1.1. Host Nation (HN) DZ Surveys. When dropping HN military jumpers and/or equipment on a HN surveyed DZ, the mission can be performed using only a safety-of-flight review (see **2.22.1.2.** below) of the HN survey. Users remain responsible for ground operational and safety criteria IAW **2.22.1.** above. However, when US personnel and equipment are airdropped, HN surveys will not be used in lieu of a survey completed by US forces IAW survey procedures outlined in paragraph **2.22.**

2.22.1.2. Safety-of-Flight Review. A safety-of-flight review is completed by the nearest group tactics office on all DZ surveys. The purpose of a safety-of-flight review is to ensure an aircraft can safely ingress and egress the DZ. A safety-of-flight review includes an in-depth chart study of the terrain features along the route of flight from the IP to a distance of approximately 4 nautical miles past the DZ trailing edge.

2.22.1.2.1. A 1:50,000-scale chart should be used when available for the objective area and at least a 1:250,000-scale chart for the run-in and escape. If approved by the MAJCOM, Portable Flight Planning Software (PFPS) may be used instead of paper charts. The safety-of-flight review lists all obstructions such as terrain, towers, or power lines that may affect the aircraft's ability to achieve drop altitude and airspeed. Also listed on the safety-of-flight review are any prohibited areas, noise sensitive areas, special use airspace, route of flight to avoid such areas, preferred routing, Notice to Airmen (NOTAM) requirements, etc. Evaluation of terrain/obstructions should include service ceiling and climb performance for the particular aircraft involved, the ability of the aircraft to fly over the DZ at slow speeds and escape from the DZ using three-engine climb out rates. If these criteria cannot be met, the run-in must be modified, drop altitude raised, or the safety-of-flight review denied.

2.22.2. When conducting operations on a DZ that was previously surveyed by another unit, the commander of the using unit is responsible for ensuring the DZ meets the criteria for that operation. In all cases, the using unit must accept responsibility for all personnel injuries, parachute or load damage, and property damage occurring on the DZ.

2.22.3. Tactical DZ Surveys. During exercises and contingencies, when time or situation do not permit completion of a full DZ survey, a tactical DZ survey may be required to support highly mobile ground forces.

2.22.3.1. Though preferable, the use of an AF Form 3823 is not required for a tactical survey. Requests and surveys may be passed electronically. As much information as practical should be obtained and forwarded for review.

2.22.3.2. Requests for tactical surveys will be forwarded to the designated exercise/contingency airlift or special operations component senior representative for final review.

2.22.3.3. When using a tactical DZ, the airlift unit assumes responsibility for aircraft safety-of-flight and the receiving unit assumes responsibility for injury to personnel or damage to equipment/air items. The DZ size should be determined by the mode of delivery, load dispersal, and discussion with receiving unit regarding air item recoverability and load survivability.

2.22.4. Parachute Demonstration Team DZ Surveys. The Air Force "Wings of Blue," STARS, and MAJCOM sponsored parachute demonstrations do not require a formal DZ survey for public affairs coordinated high altitude low opening (HALO) precision parachute demonstrations using Air Force aircraft. It is the responsibility of the demonstration team leader/jumpmaster to ensure all service, FAA, and hosting organization requirements are met on and around the DZ. It is the responsibility of the flying unit to ensure flight safety will not be compromised and that applicable NOTAMs are filed with the FAA. It is the responsibility of both the flying unit and the demonstration team leader/jumpmaster to ensure all aspects of the planned operation are briefed and understood by all parties involved.

2.23. Drop Zone Review Process. The following paragraphs outline the DZ review process from performing the initial groundwork to the final incorporation of the DZ into the ZAR. Use of the ZAR will expedite mission planning, enhance safety, and avoid duplication of surveys. Information in the ZAR does not replace the need for a completed survey prior to conducting drop zone operations. All completed surveys should be forwarded by the appropriate agencies to HQ AMC/DOK for inclusion in the worldwide ZAR database.

NOTE: DZ surveys become obsolete 5-years after the final review date and must be resurveyed prior to use. Surveys will also be reaccomplished when the user and/or airlift provider determines changes in the ground or air aspects of the DZ data require a new survey.

2.23.1. The surveyor (AF Form 3823, item 4A2) performs the actual ground portion of the DZ survey (i.e., measurements, coordinates, calculating size, obtaining maps and creating diagrams) and annotates results on the AF Form 3823. The surveyor may be a member of the unit that intends to use the DZ, or a member of another unit may perform the ground portion of a survey if requested and time permits. For example, a USAF member may perform the ground survey for an Army unit and vice-versa. To facilitate future use of surveyed DZs, initial surveys will encompass the largest area available and will not be limited by specific mission requirements. The surveyor will forward the completed survey to the ground operations review authority. Include recommended use, any deviations from DZ standards contained in service or MAJCOM directives, and other pertinent remarks. Throughout the review process, DZ survey packages will include all applicable maps, photos, charts and diagrams necessary to determine the safety and utility of the DZ.

NOTE: Interested users may contact the Combat Control School, DSN 424-1406, to obtain slots in the Survey Course. Slots will be on a space-available basis to all non-CCT personnel.

2.23.2. The ground operations review authority (AF Form 3823, item 4C) is normally the surveyor's commander or designated representative. This review ensures the survey form is complete, accurate, and the DZ meets the criteria for planned ground operations.

2.23.3. The safety-of-flight reviewer (AF Form 3823, item 4D) performs the safety-of-flight review ensuring that the DZ can be safely used from a flight perspective. The safety-of-flight review is completed by the chief, group tactics, or as assigned by the OG/CC or equivalent.

2.23.4. Air Operations Approval. (AF Form 3823, item 4E). Prior to use, surveys will be approved for air operations by the OG/CC or the appropriate ACC, respectively. This approval assures that the safety-of-flight review has been accomplished and the DZ is considered safe for air operations.

2.23.5. Once item 4E of the AF Form 3823 is completed, the survey is ready for use. All completed surveys should be forwarded to HQ AMC/DOK, 402 Scott Drive, Scott AFB IL, Unit 3A1, 62225-5320, to maintain the most current data in the ZAR database. Respective group tactics offices are the local area repositories for DZ surveys.

2.23.6. DZ surveys document the conditions that existed at the time the survey was accomplished. Recommended uses may be based on minimum requirements and should not be misconstrued to be all-inclusive; (i.e., a DZ recommended for personnel may be suitable for a single parachutist but not for 15, or it may be suitable for a C-130 but not a C-17). It is the responsibility of the supporting force and supported forces involved to ensure that any DZ being considered for use meets the requirements for their specific operation.

Chapter 3

LANDING ZONE OPERATIONS

Section 3A—Landing Zone Operations

3.1. General. There are two types of airland operations that provide transportation within a theater or joint operations area. Routine air movement is usually unopposed and uses secure airfields or well-established landing zones (LZ); the majority of these missions involve the administrative airlift of troops and equipment. Certain phases of any airlift operation, or the entire operation, may be accomplished by airlanding troops and equipment directly into the objective area. Combat control personnel normally provide landing zone surveys.

NOTE: Combat controllers are authorized to use night vision goggles while controlling aircraft in terminal areas. Pararescue, combat rescue officers, and crewmembers are authorized to use night vision goggles for marshalling of aircraft in terminal areas if trained and certified in the procedure.

3.2. Airlift Mission Commander Responsibilities. The airlift mission commander selects the air tactics and designs the flow of air movement to comply with the delivery requirements. The airlift mission commander establishes control through combat control personnel of all air traffic movement (traffic pattern, landing, taxi, parking, and takeoff) at Air Force operated LZs.

3.3. Landing Zone Selection. The ACC with the other component commanders, and the joint force engineer determine the most suitable locations. JFSOCC forces determine their suitable locations from JSOACC recommendations. In all cases, selected sites must meet AF operational requirements, ground component requirements, and construction requirements.

3.4. Landing Zone Classification. The following general data is intended to correlate the Army airfield classification system with the Air Force classification system. The correlation of these airfields may not be exact and specifications are dependent upon aircraft gross weight, utilization of aircraft arresting equipment, criteria for the particular instrument approach planned, and model and type of aircraft.

3.4.1. Air Force airfields are usually constructed to standards that are based primarily on the expected life of the airfield.

3.4.1.1. Expedient airfields are those surfaced with dirt, membrane, landing mat, or any combination of these.

3.4.1.2. The criteria in AFJPAM 32-8013, Volume II (FM 5-430-00-2), *Planning and Design of Roads, Airfields and Heliports in the Theater of Operations - Airfield and Heliport Design*, outlines construction criteria of airfields for aircraft operating under normal conditions and procedures. Combat control personnel are trained to perform tactical LZ surveys or assessments in support of airlift operations. They determine LZ suitability by using general criteria in AFJPAM 32-8013, Volume II (FM 5-430-00-2), and the specific tactical LZ criteria contained in MAJCOM supplements to this instruction. **Table 3.1.** shows the general peacetime minimum sizes for various USAF fixed-wing LZs. These LZs are based upon required use of maximum effort take-off/landing procedures by arriving/departing aircraft. These procedures are defined by applicable aircraft operating manuals.

Table 3.1. Minimum Runway Criteria.

		Width (Ft) (NOTE 1)		
Type AC	**Length (Ft) (NOTE 1)**	**No Turn Required**	**180 Degree Turn (Normal)**	**180 Degree Turn (3 Point)**
C-130	3,000	60	60	50 (**NOTE 2**)
MC-130	3,000	60	60	50
ALL C-130 NVG	3,500	60	75	
C-17	3,500	90	143	80 (**NOTE 2**)
C-17 SOLL II	3,500 (**NOTE 4**)	90	143	80
C-141	6,000 (**NOTE 3**)	98	138	
C-141 SOLL II	5,000	98	150	
C-5	6,000 (**NOTE 3**)	150	150	
C-5 SOLL II	5,000	98	150	

NOTE 1: Minimum operational criteria without a waiver during peacetime operations
NOTE 2: Does not include any safety margin. Increase by 10 feet for routine operations
NOTE 3: Waiverable to 5,000 feet by NAF/DO or ACC
NOTE 4: Waiverable to computed ground roll plus (+) 500 ft by the NAF/DO or ACC

3.4.1.3. Airfield construction is generally done following the guidelines in AFJPAM 32-8013, Volume II (FM 5-430-00-2). However, criteria to be utilized in a specific theater of operations is based on local conditions and determined by Army and Air Force staff engineers acting for the joint force commander.

3.4.2. Potential LZ areas fall into two basic categories: prepared, and semi-prepared (unpaved). Prepared areas may include existing airfields, roads, highways, or other paved surfaces. Semi-prepared surfaces are natural areas such as deserts, dry lakebeds, and flat valley floors. These surfaces offer the ability to construct short airstrips for a limited use and may or may not have an aggregate surface.

3.4.3. Combat control personnel are trained and equipped with total station and clinometers to assess the approach zone clearance. They are also trained and equipped with airfield or dynamic cone penetrometers that are used to check weight-bearing capability of semi-prepared LZs.

NOTE: Contact Air Force Civil Engineering Support Activity (AFCESA) for hard surface pavement evaluations. AFCESA contact information can be found in the Engineering Technical Letter (ETL) 98-5.

3.4.4. Combat control personnel are not qualified to evaluate hard surface pavements for traffic cycles and weight bearing.

3.4.5. Combat control personnel are not qualified to perform engineering surveys. They may be required to assist the supporting forces commander as a designated representative in selecting LZ sites.

3.4.6. Existing or proposed airfields that require precise determination of gradients should be surveyed by engineering teams using appropriate survey equipment.

3.4.7. Semi-permanent runways are usually surveyed by engineering units and do not require a survey by combat control personnel. However, semi-permanent and permanent installations, such as captured

enemy airfields, must be assessed for possible aircraft hazards and correct dimensions prior to use. Combat control personnel may be tasked to perform this type of assessment using criteria outlined in paragraph **3.4.1.2.**

NOTE: Combat control personnel normally only conduct hard surface assessments for the theater commander during contingencies.

3.4.8. The combat controller gathers data from the on-site survey, prepares an LZ survey package using the AF Form 3822, **Landing Zone Survey**, and recommends approval or disapproval to the appropriate agency for use.

3.4.9. During the survey process, if there is any potential for impact or damage to the environment due to the construction or modification of new or existing LZs, follow the procedures within AFI 32-7061, *The Environmental Impact Analysis Process.*

3.5. General Landing Zone Criteria. Combat controllers may be required to assist in selecting LZs. General guidelines are available in AFJPAM 32-8013, Volume 2 (FM 5-430-00-2). Specific tactical LZ criteria for the type aircraft involved are contained in applicable MAJCOM supplements to this instruction. Additionally, the following general data applies to LZ criteria:

NOTE: ST units will use AFCESA ETL 98-5, C-130 and C-17 Contingency and Training Airfield Dimensional Criteria. ETL 98-5 supercedes dimensional criteria in AFJPAM 32-8013, Volume 2 (FM 5-430-00-2), and ETL 97-9, Criteria for Design, Maintenance, and Evaluation of Semi-Prepared Airfields for Contingency Operations of the C-17 Aircraft. An electronic copy of ETL 98-5 is available at: **http://www.afcesa.af.mil/Publications/ETLs/default.html**. ETL 98-5 will remain in effect until the criteria and data are incorporated into AFJPAM 32-8013, Volume 2 (FM 5-430-00-2). Contact AFCESA, DSN 523-6084, for publishing date.

3.5.1. Size and Terrain. LZs should be of sufficient size to permit rapid takeoff, landing, and loading operations. Terrain may be of soil, dirt, sand, or another suitable surface. Consideration must be given to the slope and elevation of the runway, aircraft capability, taxiways, and loading restrictions including their ability to support aircraft weight. Criteria for the layout of newly constructed LZs are listed in detail in AFJPAM 32-8013, Volume II (FM 5-430-00-2), Table 11-3. **Table 3.1.** shows the general minimum sizes for various fixed-wing LZs. For criteria that are more specific, see MAJCOM publications.

3.5.2. Environmental Impact Analysis. The proponent of the survey request (i.e., the requesting office, unit, or activity) is responsible for completing the AF Form 813, **Request for Environmental Analysis**. AF Form 813 is used to document the need for environmental analysis of certain categorical exclusion determinations for proposed actions. This form helps narrow and focus the issues to potential environmental impacts.

3.5.3. Soil Conditions. Before any short field training operations are scheduled from an unprepared strip, there must be a thorough investigation of soil conditions to determine whether the abrasive content could adversely affect aircraft operations. Whenever possible, the weight bearing capacity of the landing, taxiing, and parking areas must be determined. The weight bearing capacity is determined IAW AFJPAM 32-8013, Volume II (FM 5-430-00-2).

3.5.4. LZ Surface Tolerances and Clearances. Tolerance or roughness will depend upon sheer strength, hardness, and size of items that cause roughness. Roughness interrupts smooth rotation of aircraft tires and interferes with marginal aerodynamic lift of flight control surfaces at slow speed.

Location and frequency of surface crests or wave tops are of paramount importance. The following items may be used as a guide in determining suitability of runway surface, shoulders, and clear areas. Exceeding these limits may result in structural failures of the aircraft. Roughness must be minimized for sustained operations.

3.5.5. Traffic Area (Runway, Overruns, Taxiways, Parking Apron):

3.5.5.1. Rocks. Rocks in traffic areas must be removed, embedded, or interlocked with each other so aircraft tires will traverse the area without causing displacements.

3.5.5.2. Soil Balls (dried cohesive dirt clods). Soil balls or dry cohesive dirt clods (clay excluded) up to 6 inches in diameter that will burst upon tire impact are allowed. Hardened clay clods that have similar characteristics as rocks and exceed 4 inches in diameter must be pulverized or removed from the traffic areas.

3.5.5.3. Tree Stumps. Remove all stumps, fill holes, and compact soil to the weight bearing capacity of the surrounding surface.

3.5.5.4. Ditches. Eliminate ditches from traffic areas. When filled, the weight bearing capacity must be that of the surrounding area.

3.5.5.5. Plowed Fields. Contours of dirt patterns established to reduce erosion, water drain-off, and for planting preparation which have been accomplished by agricultural plowing usually contain a soft core and normally will not require removal. However, such dirt patterns should be examined carefully to determine the need for removal.

3.5.5.6. Depressions and Soil Mounds. Depressions and soil mounds do not have sharp corners and are recognized as oval or circular gradual sinks or rises. Level or fill depressions or mounds that exceed 15 inches across the top and 6 inches in depth or height until they meet grade tolerance criteria.

3.5.5.7. Potholes. Potholes are circular or oval in shape and are distinguished from depressions by their smaller size and sharp corners. Potholes must be filled if they exceed 15 inches across their widest point and 6 inches in depth.

3.5.6. Shoulder. A graded and compacted area on either side of the runway to minimize the risk to aircraft of running off or landing off the runway. Shoulders should have tree stumps cut flush with the ground; rocks and objects, which could be ingested by engines or cause damage to the bottom of the aircraft should be removed. Shoulders are normally 10 feet wide with a maximum positive or negative grade of 3%.

3.5.7. Graded Area (previously clear area). An area located adjacent to and outside of the runway shoulders. Grades may slope up or down to provide drainage, but may not penetrate the primary surface. The minimum grade is 2% and the maximum is 5%. Graded areas should not have any obstacles over 4 inches high except vegetation, runway edge markers, runway distance remaining markers, Mobile Aircraft Arresting Systems (MAAS), and/or other visual or electronic navigational aids which must be sited in this area due to their function. Width of graded area varies from 35 feet (10.7m) to 375 feet (114.3m) depending upon type aircraft the airfield is intended to support. Appropriate dimensions are contained in MAJCOM supplements to this instruction.

3.5.8. Clear Zone. A cleared area located at each end of the runway. Width is normally equal to runway, shoulders, and clear areas and length is normally 500 feet or 1,000 feet (152.4m or 304.8m).

3.5.9. Transitional Area (previously lateral safety zone). The normal width requirements are 60 feet (C-130), or 70 feet (C-17), extending outward from the graded area with a maximum positive slope of 10% and a maximum negative slope of 20%. Transitional areas should meet the criteria for the most restrictive type of aircraft using the LZ.

3.5.10. Approach Zones. A trapezoidal area extending outward from each clear zone within which no object may penetrate the glideslope angle. Approach zones should meet the criteria for the type of aircraft using the LZ. The normal clearance surface is established on a 35:1 ratio for C-130 operations and 20:1 for C-17 operations.

3.5.11. Overrun. A graded and compacted portion of the clear zone, located as an extension to the end of the runway. An overrun is normally not considered part of the usable runway when establishing airfield markings. Do not include overrun distances to calculate the available LZ length required for operations. Overruns are used to minimize risk to aircraft due to overrun on takeoff or undershooting a landing. The width is normally equal to that of the runway and the type of aircraft involved determines length. See MAJCOM supplements to this instruction.

3.6. Landing Zone Markings.

3.6.1. LZ Marking Equipment. LZs are normally marked with VS-17 marker panels secured to upright supports for day operations and omni-directional visible lighting systems with a minimum output rating of 15 candela, and strobe lights if required, for night operations. The C-17 uses the visual landing zone marker panel (VLZMP). Virtually any type overt lighting or marking system is acceptable, if all participating units are briefed, and concur with its use. ST units may also use specialized clandestine lighting systems.

3.6.2. LZ Markings and Identification. Specific details must be determined concerning the type and location of LZ markings as well as airfield identification procedures. Consider existing international agreements. LZ markings and identification procedures must be briefed to all associated ground and aircrew members.

3.6.3. Airfield Markings. Utilize conventional airfield markings consistent with flying safety. When landings can be anticipated at both ends of the LZ, ensure touchdown areas are marked at both ends.

3.6.4. Airfield Marking Patterns (AMP). In general, there are four standard types of airfield marking patterns, designated AMP-1 through AMP-4. These correspond to the type airland mission being supported and are used to simplify mission tasking. A 300 foot underrun and overrun are required for all LZ operations. The four standard LZ marking types include:

NOTE: Safety zones are not required for AFSOC assigned/gained, aircraft OPCON to USSOCOM, a theater special operations command, or any aircraft during contingencies.

3.6.4.1. AMP-1. Normally used to support day or night VMC tactical airlift missions. See **Figure 3.1.** for day markings and **Figure 3.2.** for night/instrument markings. These markings also implement STANAG 3601 and ASCC AIR STD 44/37C requirements. When using the AMP-1 pattern, aircrew mission planners are authorized to reduce or eliminate panel markings for well-defined runways during day VMC operations. As a minimum, the touchdown zone must be marked.

3.6.4.1.1. AMP-1 (Instrument Approach). Instrument approaches for contingency landing zones require special configuration. This configuration is used to support day or night tactical airlift missions during times of reduced visibility. Aircrew mission planners are not authorized

to reduce or eliminate panels, lights, or electronic navigational aids during limited visibility operations.

3.6.4.1.1.1. Minimum requirements include the following: Special Tactics personnel, ground-to-air radio communications, AN/TRN-45 Mobile Microwave Landing System (MMLS) and the Contingency Airfield Night Lighting System (CANLS). CANLS consists of two sequenced flashing lights, either side of the approach end of the runway, and five sequenced flashing lights on extended runway centerline at 300 feet intervals, Standard AMP 1 (Night/Instrument) Landing Zone markings, and an IFR modified TRN-41 portable TACAN. See **Figure 3.2.** for placement and configuration of these components.

NOTE: Minimum requirements allow single direction approaches. An additional MMLS and approach lights are required if bi-directional approaches are desired or required.

3.6.4.1.1.2. Location of the MMLS is based on a Special Tactics Team LZ Survey (runway length, obstacles, and airfield layout are all considerations) but is ultimately based on final Terminal Instrument Procedures approach plates/approval. However, for planning purposes, for a runway 5,000 feet or less in length, position the co-located MMLS 300 feet from the threshold and 200 feet right of centerline. For a runway greater than 5,000 feet in length, position the MMLS 700 feet from the threshold and 200 feet right of centerline.

3.6.4.1.1.3. A FAA flight check or military aircraft flyability check will be accomplished prior to using the landing zone/airfield for sustained operations

3.6.4.2. AMP-2. AMP-2 can also be used to support day or night tactical airlift requirements. AMP-2 requires fewer panels or lights than AMP-1. Overt or covert lighting may be used. See **Figure 3.3.** and **Figure 3.4.**

3.6.4.3. AMP-3. AMP-3 further reduces the number of panels/lights used to support day or night tactical airlift requirements. Overt or covert lighting may be used. The “Box and One” is for runway identification only, and the box length will be 500 feet. See **Figure 3.5.** and **Figure 3.6.**

3.6.4.4. AMP-4. No markings are required.

3.6.5. Marking Considerations:

3.6.5.1. The LZ markings must be clearly visible to the pilot as early on the approach as possible.

3.6.5.2. If security requires, night LZ markings should be visible only from the direction of the aircraft’s approach. If flashlights are used, they may be equipped with simple hoods or shields and aimed toward the approaching aircraft. Fires or improvised flares may be screened on three sides or placed in pits with sides sloping toward the direction of approach.

3.6.5.3. During daylight landings, marker panels should be erected upright, facing toward the aircraft approach, to increase the pilot’s ability to see them. Marker panels and supports must be reasonably frangible to avoid excessive damage if struck by an aircraft.

3.6.5.4. Mark loading and taxi areas as determined during mission planning. For night operations, place suitable blue lights 500 feet apart on the straight portions, and when required, reflectors should be placed halfway between the blue lights. Light spacing may be reduced to 75 feet on curves and at corners or intersections.

Figure 3.1. Airfield Marking Pattern - 1 (Day).

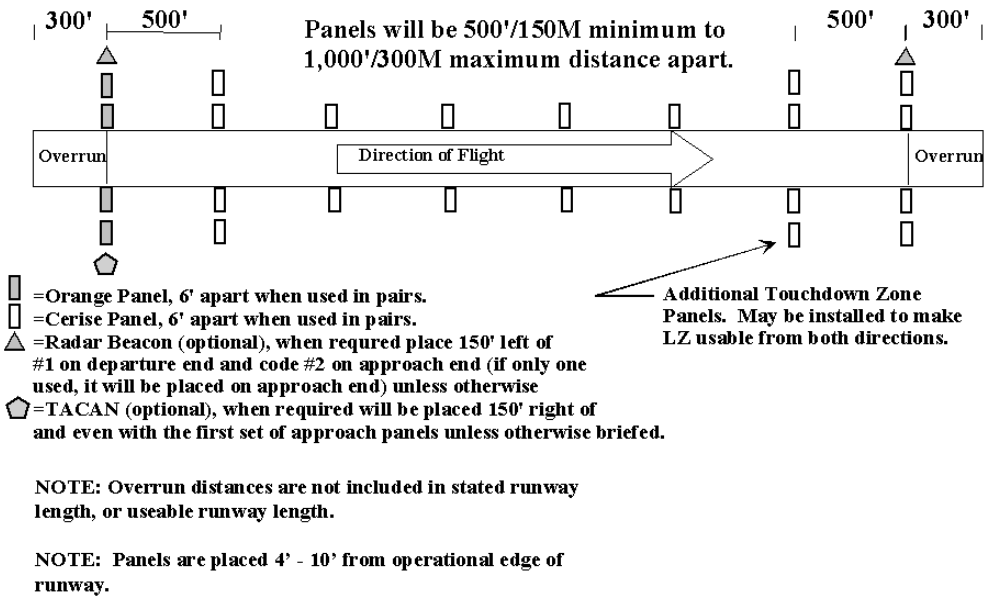

Figure 3.2. Airfield Marking Pattern - 1 (Night/Instrument Approach).

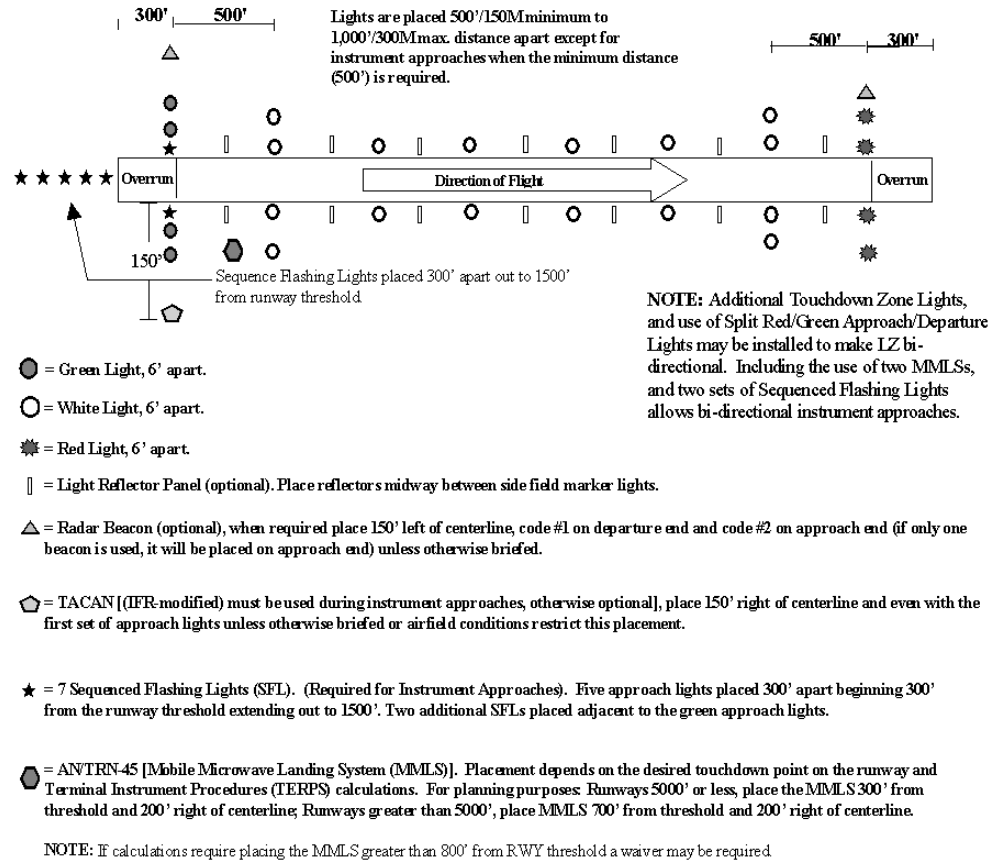

Figure 3.3. Airfield Marking Pattern - 2 (Day).

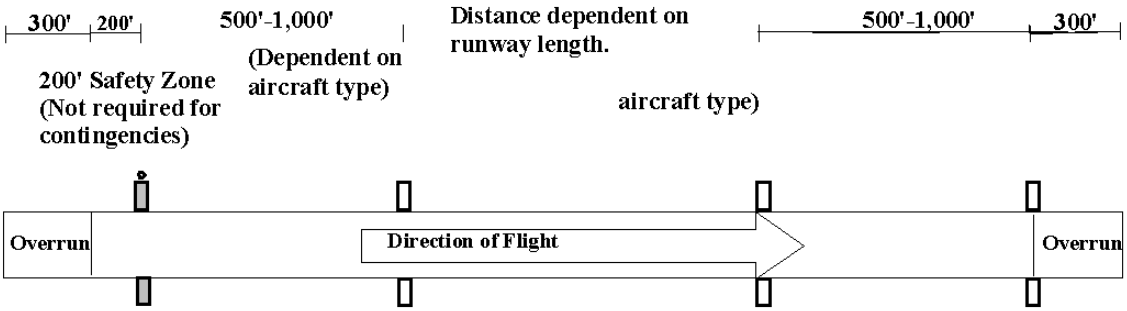

=Orange Panel
=Cerise Panel
=Reception committe leader (RCL) signal station: Authentication, if used, will be at or adjacent this point.

NOTE: Overrun distances are not included in stated runway length, or useable runway length.

NOTE: Panels are placed 4' - 10' from operational edge of runway.

Figure 3.4. Airfield Marking Pattern - 2 (Night).

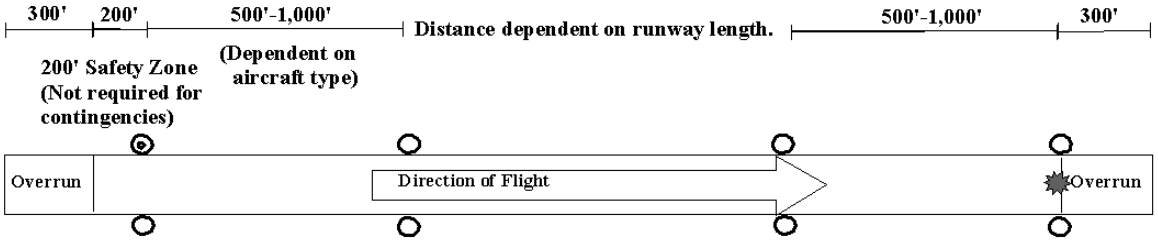

=Field Marker Light: May be overt or covert.
=Reception committe leader (RCL) signal station: Authentication, if used, will be at or adjacent this point.
=Flashing Strobe Light: Placed on centerline at the end of the usable runway or at a point that permits safe landing and takeoff (may be overt or covert).

For day operations, substitute panels for lights.

NOTE: Overrun distances are not included in stated runway length, or useable runway length.

Figure 3.5. Airfield Marking Pattern - 3 (Day).

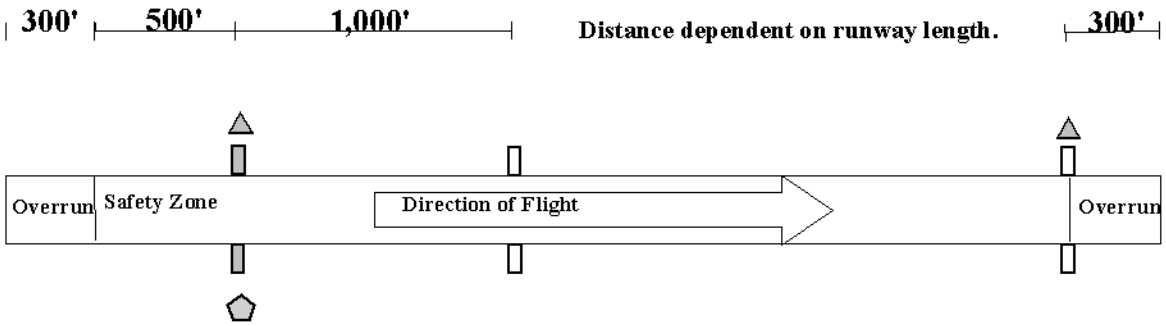

▮ =Orange Panel.
▯ =Cerise Panel.
△ =Radar Beacon (optional), when required place 150' left of centerline, code#1 on departure end and code #2 on approach end (if only one beacon is used, it will be placed on approach end) unless otherwise briefed.
⬠ =TACAN (optional), when required will be placed 150' right of centerline and even with the first set of approach lights unless otherwise briefed.

NOTE: Overrun distances are not included in stated runway length, or useable runway length.

Figure 3.6. Airfield Marking Pattern - 3 (Night).

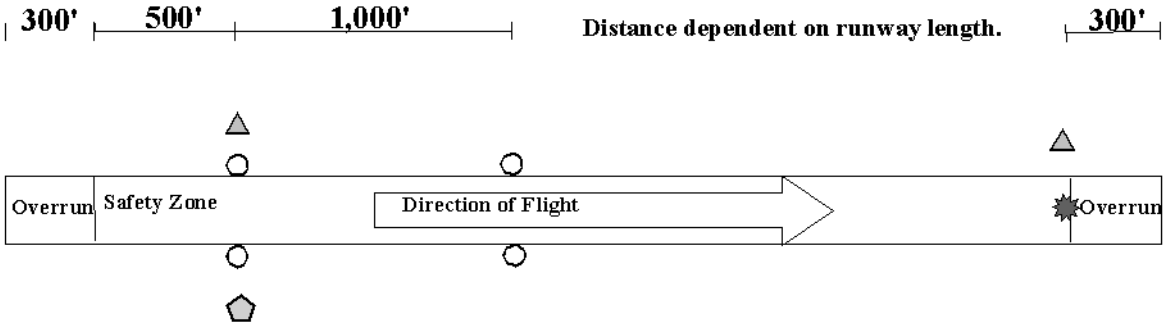

○ =Field Marker Light: May be overt or covert.
✸ =Flashing Strobe Light: Placed on centerline at the end of the usable runway or at a point that permist safe landing and takeoff (may be overt or covert).
△ =Radar Beacon (optional), when required place 150' left of centerline, code#1 on departure end and code #2 on approach end (if only one beacon is used, it will be placed on approach end) unless otherwise briefed.
⬠ =TACAN (optional), when required will be placed 150' right of centerline and even with the first set of approach lights unless otherwise briefed.

For day operations, substitute panels for lights.

NOTE: Overrun distances are not included in stated runway length, or useable runway length.

3.7. Emergency Signals. Standard air traffic control light signals are normally used if radio communications are not established. A go around may also be signaled by using either red flares, a red light beam aimed directly at the pilot, or a radio call to the pilot. See **Table 3.2.**

NOTE: Emergency signals must be coordinated and thoroughly briefed. NVG equipped crews may be unable to discern colored lights, and any light signal pointed at the aircraft may blind the aircrew.

Table 3.2. Standard Air Traffic Control Light Signals.

SIGNAL	AIRCRAFT ON GROUND	AIRCRAFT IN AIR
Steady Green	Cleared for Takeoff	Clear to Land
Flashing Green	Clear to Taxi	Return for Landing
Steady Red	Stop	Give way to other aircraft and continue circling
Flashing Red	Taxi Clear of Runway	Field unsafe-Do not land
Flashing White	Return to starting point	N/A
Alternating Red/Green	Use extreme caution	Use extreme caution

3.8. Communications. The OG/CC or ACC will determine communications requirements. Standard Federal Aviation Administration (FAA) radio procedures will be used unless otherwise briefed. The Landing Zone Controller (LZC) and Landing Zone Safety Officer (LZSO) are the only individuals authorized to communicate control instructions to aircraft operating near an LZ.

3.9. Terminal NAVAIDS. ST units have the capability to tactically employ and operate a variety of NAVAIDS in support of LZ operations. The units deploy NAVAIDS, such as the TACAN, ZM, mobile microwave landing system (MMLS), or radar beacons as directed by the ACC. Standard NAVAID placement procedures are listed below; however, the tactical environment will frequently require modifications of these standard placements.

3.9.1. TACAN. When used for instrument procedures, recommended placement is 150 feet right of runway centerline abeam the first set of approach lights in an area free of excessive aircraft, vehicle, and troop movements.

3.9.2. Radar Beacons. Since radar beacons transmit signals via “line-of-sight,” terrain on the LZ and along the inbound course must be taken into consideration to allow the earliest possible acquisition. Ensure aircrews are briefed on beacon placement.

3.9.2.1. AMP-1 through -3 Landings. Place one radar beacon (code 2) 150 feet left of runway centerline abeam the first set of steady lights (panels) in the touch down zone. Place a second beacon (code 1) 150 feet left of the departure end flashing strobe.

3.10. Landing Zone Personnel.

3.10.1. Minimum Personnel. A Landing Zone Safety Officer (LZSO) is required and, depending on the operations, a Landing Zone Controller (LZC) may also be required.

3.10.2. The LZC's primary function is to provide air traffic control services.

3.10.2.1. The LZC will be a qualified combat controller certified by the unit commander as capable of performing unilateral or joint air traffic control duties. ST units are authorized to combine LZC/LZSO functions during single-ship VFR operations. When combined, LZSO skill level requirements must be met.

3.10.3. The LZSO will normally be a qualified E-5 or above (seven or nine skill level) combat control NCO, special tactics officer, or airlift aircrew officer (C-130 or C-17 aircrew officer for LZ operations) certified by the unit commander as capable of performing as a LZSO.

3.10.3.1. During visual flight rules (VFR) operations not requiring Air Traffic Control (ATC) services (Class G airspace), qualified Air Force Reserve Command (AFRC), Air National Guard (ANG), and AF active duty personnel designated by their commander may establish LZ markings. If the LZ is semi-prepared, they are restricted to operations on their local training LZ. These personnel assume the LZSO responsibilities listed in paragraph **3.10.4.**

NOTE: Under no circumstances are personnel who fall under this category permitted to provide aircraft with air traffic control services.

3.10.3.1.1. Aircrew member certification will consist of training coordinated between the flying squadrons and ST. This training will be conducted using HQ AFSOC formal lesson plans. The flying squadron commander will review/authorize unilateral single-ship missions to landing zones without a LZC or an operating control tower (Class G airspace).

3.10.3.2. Units listed in paragraph **2.17.3.2.** are authorized to use qualified personnel to establish LZs supporting single-ship VMC operations that do not require air traffic control services (Class G airspace).

NOTE: Under no circumstances are personnel who fall under this category permitted to provide aircraft with air traffic control services.

3.10.3.2.1. Civilian contract personnel must complete the HQ AFSOC formal lesson plan and receive instruction IAW paragraph **3.10.3.1.1.** before they are authorized to control landing zone operations. These personnel assume the LZSO responsibilities listed in paragraph **3.10.4.** Previously qualified combat control personnel may perform LZC functions provided their statement of work requires those duties.

3.10.4. The LZSO represents the OG/CC or ACC as provided in mission directives and is responsible for the following:

3.10.4.1. Ensuring required aircraft rescue and firefighting (ARFF) coverage is at the LZ prior to beginning airland operations, and ensures continuous contact with ARFF is maintained.

3.10.4.2. Maintaining close liaison with the using unit commander, or designated representative, during joint operations.

3.10.4.3. Observing and evaluating all factors that may adversely affect the safety and efficiency of the operation.

3.10.4.4. Inspecting the LZ prior to use IAW paragraph **3.5.**, and validating the LZ meets criteria listed on the current LZ survey.

3.10.4.5. Monitoring the conditions of the landing, taxi, and parking areas.

3.10.4.5.1. The LZSO is required to clear the runway before advising aircraft they are clear to land/takeoff at their own discretion.

3.10.4.6. Ensuring LZ markings and NAVAID placement are correct and operating.

3.10.4.7. Ground handling and marshaling of aircraft.

3.10.4.8. Evaluating and reporting surface wind and meteorological phenomenon.

3.10.4.9. Ensuring the dissemination of available altimeter settings.

3.10.4.10. Formulating minimum safe altitudes and monitoring the deconfliction of artillery and close air support operations.

3.10.4.11. Advising the LZC if conditions are unsafe for landing operations and ensures cancellation of operations is relayed to appropriate agencies.

3.10.4.12. Supervising all Air Force personnel on the LZ.

3.10.4.13. Maintaining contact with the LZC during the operation.

3.11. Aircraft Rescue and Fire Fighting Requirements. Specific requirements for ARFF are contained in MAJCOM (i.e., AMCI 11-208, *Tanker/Airlift Operations*) publications. When required, the user will preposition suitable equipment at the LZ prior to conducting operations.

3.12. Landing Zone Review Process. The following paragraphs outline the LZ survey process from performing the initial groundwork to the final incorporation of the LZ into the ZAR database. Use of the ZAR will expedite mission planning, enhance safety, and avoid duplication of surveys. Information in the ZAR does not replace the need for a completed survey prior to conducting landing zone operations. All completed surveys should be forwarded by the appropriate agencies to HQ AMC/DOK for inclusion in the worldwide database. LZ surveys become obsolete 5 years after the final review date and must be resurveyed prior to use. Procedures for requesting an initial or re-survey of an LZ are contained in paragraph **1.5.**

3.12.1. Combat control personnel complete the AF Form 3822, **Landing Zone Survey** (**Attachment 5**).

3.12.2. Following completion of the ground survey by combat control personnel, the AF Form 3822 is forwarded to the appropriate chief, group tactics, or as designated by the OG/CC, for a safety-of-flight review and approval.

3.12.3. The AF Form 3822 is not valid for use until it has been reviewed and recommended for use by the appropriate MAJCOM/DO or the ACC. The AF Form 3822 is then forwarded for inclusion in the landing zone database.

3.12.4. The AF Form 3822 documents the conditions that existed at the time the survey was accomplished and may not account for changes to the LZ seasonal topography. The condition of the LZ should be confirmed prior to commencing operations.

Section 3B—Helicopter Landing Zone Operations

3.13. General. Helicopters require their own landing zone procedures to safely operate in areas unsuitable for fixed-wing aircraft. HLZ surveys are required for all training and exercises and highly recom-

mended as part of the normal mission planning for contingencies. The paragraphs below define the procedures.

3.14. Helicopter Landing Zone Selection. Helicopter landing zones (HLZ) are dependent on the aircraft type and size, and whether the HLZ will be used for takeoffs/landings or alternate insertion/extraction (AIE). Selecting the HLZ location is the joint responsibility of the ACC and the supported force commander. JFSOCC forces determine their suitable locations from JSOACC recommendations.

3.14.1. Weight Bearing Capacity. HLZs are dependent on the aircraft type or size. Weight bearing capacity is not required for helicopter operations, but care must be exercised to ensure the HLZ is cleared to prevent possible engine damage or personnel injury from flying debris due to hover operations.

3.15. Helicopter Landing Zone Markings. MAJCOMs may supplement this instruction with their unique requirements. There are no USAF requirements to mark HLZs for day or NVG use. HLZs flown to unaided at night must be clearly marked with a minimum of two overt lights that either outline or target obstruction free areas compatible with the aircraft being used. Additionally, overt spot or landing lights must be available and used by the aircraft during the approach.

3.16. Helicopter Landing Zone Survey Requirements. The HLZ survey program is a group tactics function or an office with an equivalent level of expertise. Group tactics must ensure surveys are conducted IAW the procedures below.

3.16.1. Completing the HLZ survey process involves a physical inspection of the HLZ, documenting the information on the AF Form 4303, **Helicopter Landing Zone Survey**, a safety-of-flight review, and final approval. MAJCOMs will determine their own requirement for HLZ surveys for AIE training. Surveys may be accomplished by the using units whose equipment or personnel are being landed or for an AIE. For exercises and joint training operations, users must ensure the survey is completed and meets the appropriate criteria for operational and safety standards. The user must conduct a physical inspection of the HLZ prior to use to identify and evaluate potential hazards to personnel/equipment, man-made or natural structures, and ground personnel. If the survey was conducted using any other method than GPS-derived coordinates, provide the reviewer with the raw coordinate data and the method of conversion.

3.16.1.1. Host Nation (HN) HLZ Surveys. When conducting operations on or over a HN surveyed HLZ, a review of the HN survey will be accomplished before operations to the HLZ begin. Users remain responsible for ground operational and safety criteria.

3.16.1.2. A 1:50,000 scale chart or less should be used when available for the objective area for the ingress and egress (Portable Flight Planning Software (PFPS) may be used instead of paper charts if approved by the MAJCOM). The review lists all obstructions such as terrain, towers, or power lines that may affect the helicopter's route of flight. Also listed on the review are any prohibited areas, noise sensitive areas, special use airspace, route of flight to avoid such areas, preferred routing, NOTAM requirements, etc. Evaluation of terrain/obstructions should consider the particular helicopter involved, and the ability to fly over and/or land on the HLZ unless OGE hover power plus 5-percent is available. If these criteria cannot be met, the ingress must be modified, or the review denied.

3.16.2. When conducting operations on a HLZ that was previously surveyed by another unit, the commander of the using unit is responsible for ensuring the HLZ meets the criteria for that operation. In all cases, the using unit must accept responsibility for all personnel injuries, parachute or load damage, and property damage.

3.16.3. Tactical HLZ Surveys. During exercises and contingencies, when time or situation do not permit completion of a full HLZ survey, a tactical HLZ survey may be required to meet the appropriate commander's objective(s).

3.16.3.1. Though preferable, the use of an AF Form 4303 is not required for a tactical survey. Requests and surveys may be passed electronically. As much information as practical should be obtained and forwarded for review.

3.16.3.2. Requests for tactical surveys will be forwarded to the designated exercise/contingency ACC for final review.

3.16.3.3. When using a tactical HLZ, the rotary-wing unit assumes responsibility for helicopter safety-of-flight.

3.17. Helicopter Landing Zone Review Process. The following paragraphs outline the HLZ review process from performing the initial groundwork to the final coordination. All completed surveys will be forwarded to the group tactics office, or an office with an equivalent level of expertise. Surveys will be reaccomplished when the user and/or provider determine changes in the ground or air aspects of the HLZ data require a new survey.

3.17.1. The HLZ surveys will be conducted during daylight by a qualified combat controller or an instructor-qualified aircrew member (instructor pilot, instructor flight engineer, or instructor gunner). AFSPC will establish requirements in their supplement for surveying Missile Alert Facilities (MAF) and Launch Facilities. The surveyor (AF Form 4303, item 4A) performs the actual ground portion of the HLZ survey (i.e., measurements, coordinates, calculating size, obtaining maps and creating diagrams) and annotates results on the AF Form 4303. The surveyor may be a member of the unit that intends to use the HLZ, or a member of another unit may perform the ground portion of a survey if requested and time permits. To facilitate future use of surveyed HLZs, initial surveys will encompass the largest area available and will not be limited by specific mission requirements. The surveyor will forward the completed survey to the group tactics office, or the OG/CC designated office, for review. Include recommended use, any deviations from HLZ standards contained in service or MAJCOM directives, and other pertinent remarks.

3.17.2. The reviewer, in order of preference, is the Chief, Group Tactics, Squadron Commander, or Squadron Operations Officer (AFSPC/DO may designate the helicopter flight commander and operations officer as reviewing officials). The reviewer (AF Form 3823, item 4B) ensures the HLZ can be safely used from a flight perspective. Throughout the review process, HLZ survey packages will include all applicable maps, photos, charts and diagrams necessary to determine the safety and utility of the HLZ.

3.17.3. Approval Authority (AF Form 4303, item 4C). Prior to use, surveys will be approved for air operations by the OG/CC or appropriate ACC. This approval assures the review has been accomplished and the HLZ is considered safe for air operations.

3.17.4. Once item 4C of AF Form 4303 is completed, the survey is ready for use. Respective group tactics offices are the local area repositories for HLZ surveys. AFSPC/DO will designate an office to

serve as a repository for LZ surveys. It is recommended HLZ surveys be forwarded to AMC/DOK IAW paragraph **1.5.**

3.17.5. HLZ surveys document the conditions that existed at the time the survey was accomplished, and may not account for changes to the HLZ seasonal topography. Recommended uses may be based on minimum requirements and should not be misconstrued to be all-inclusive (i.e., a HLZ recommended for two MH-53s may not be suitable for a CV-22). It is the responsibility of the flying and ground units involved to ensure that any HLZ being considered for use meets the requirements for their specific operation.

3.18. Helicopter Landing Zone Survey Updates. HLZ surveys will be updated every six months. HLZs that are not updated in the six months time period will be closed until resurveyed using the above criteria (does not require a new AF Form 4303). AFSPC will establish requirements in their supplement for updating MAF and Launch Facilities. The absolute minimum to update a HLZ survey requires a qualified ST member or an instructor qualified aircrew member to resurvey the HLZ during daylight. This member must evaluate items 6 through 10 of AF Form 4303. A HLZ survey that has not been updated for 12 months is expired and a new AF Form 4303 will be accomplished.

Chapter 4

LC-130 SKIWAY AND SKI LANDING AREA CRITERIA

4.1. General. These procedures apply to all agencies involved in or supporting LC-130 operations and clarify Skiway and Ski Landing Area requirements.

4.2. Ski Landing Area Control Officer (SLACO). 109th Airlift Wing (ANG) develops and maintains procedures to train and certify SLACOs.

4.2.1. SLACOs will be designated before the deployment and will be either an experienced LC-130 pilot or combat controller experienced in LC-130 ski operations. The SLACO will be at the site and examine the results of the Ski Landing Area testing, preparation and marking. If the area meets requirements, and with the concurrence of the Camp Manager, the SLACO will advise the 109 AW Deployment Commander LC-130 ski landings/takeoffs may commence. A certified SLACO will remain at the Ski Landing Area during all initial LC-130 Ski operations until complete or until relieved by the Mission Commander.

4.3. Selection of Skiway or Ski Landing Area. Agencies planning scientific research or military exercises must choose between construction of a Skiway or Ski Landing Area. Proposed landing locations must be submitted IAW paragraph **4.3.1.** so they can be evaluated in terms of distance from hard surface staging bases, cargo requirements, meteorological conditions, number of landings and takeoffs, duration of the operation and the amount of cargo to be offloaded/onloaded. Agencies requiring landings and takeoffs on sea ice must also provide information on ice depth and surface characteristics. Minimum thickness is discussed in **Table 4.1.**

4.3.1. Submit proposed landing locations to 109 AW/139 AS Tactics (DOW), 1 Air National Guard Road, Scotia, NY 12302-9752. Phone: comm 518-344-2640/2650, or DSN 344-2640/2650.

4.4. Sea Ice Depth Testing And Evaluation Criteria. Extensive research and testing of ice characteristics has been done by several agencies and a large body of scientific research and testing data is available to agencies interested in ice field or sea ice operations. The following paragraphs provide simple LC-130 ski operations limitations and procedures.

4.4.1. The load bearing capacity of ice sheets varies with thickness, surface temperature, and weight of the aircraft and parking time. Minimum ice thickness required for LC-130 operations is based on data derived from US Naval Civil Engineering Lab, Technical Report R860, *Study of Related Properties of Floating Sea-Ice Sheets and Summary of Elastic and Visco-Elastic Analyses*, and LC-130 aircraft field experience. The limits in **Table 4.1.** are established as minimum values for LC-130 aircraft. They may be applied up to the maximum ski landing/takeoff gross weight of 147,000 pounds. Operations with ambient temperature above freezing must be evaluated and approved by the commander.

Table 4.1. Ice Weight Bearing Capacity.

SURFACE TEMPERATURE	MINIMUM ICE THICKNESS
-10 deg C or less	55 inches
-10 to -5 deg C	60 inches
-5 to 0 deg C	85 inches

4.4.2. Testing of sea ice depth at landing/takeoff areas should be done by drilling through the ice at 500-foot intervals on alternated sides for the entire length of the landing area. Minimum depth values may not include surface snow or slush. Additional drill tests should be performed weekly during continuous operations or prior to resuming landings/takeoffs after a period of non-use of more than one week. The area should be checked regularly for signs of cracking or surface deterioration.

4.4.3. Surface evaluation of potential landing/takeoff areas is necessary to assure the area is suitable for LC-130 ski operations. The better the natural conditions the less preparation work will be necessary. The best condition is a relatively smooth ice surface with 2 or more years of snow accumulation to a depth of 12 inches (minimum acceptable depth is 6 inches). Conditions to be avoided are:

4.4.3.1. Undulating or irregular ice sub-surface impacting the skis during landing or takeoff. The undulating sub-surface may be covered with snow that would be deformed by the skis during ski runs.

4.4.3.2. Bare ice with little or no snow cover. Snow cover is required to cushion and distribute loads over the skis. Even small irregularities or cracks in bare ice can create stress points along the ski that can cause damage.

4.4.3.3. Large irregularities in the snow surface (sastrugis, ridges, and humps) require extensive surface preparation before ski operations.

4.5. Skiway Marking.

4.5.1. Skiways will be marked in accordance with **Figure 4.1.** These markings are intended to allow flight operations in instrument meteorological conditions (less than 1,500 ft ceiling and 3 miles visibility). The length and width of the marked area may vary with field elevation, snow conditions, operating gross weight, and duration of use. Minimum length and width is 5,000 ft x 150 ft at sea level. Length and width up to 15,000 ft x 300 ft may be required at higher elevations. IAW paragraph **4.3.1.**, 109 AW will coordinate with the supported agency to determine length and width for development of a particular Skiway. In addition to Skiway markings, a cargo offload/onload area will be marked (**Figure 4.2.**). It may be located adjacent to the Skiway or further removed according to camp requirements. Accumulated cargo or other structures must not be closer than 75 feet from any skiway edges. Skiway markers are made from nylon mesh and mounted on bamboo poles (**Figure 4.3.**).

4.5.2. Operations of a temporary nature, flown in visual meteorological weather conditions (1,500 ft ceiling and 3 miles visibility or greater) requiring limited ski landings/takeoffs for a short duration may not require an established Skiway. 109 AW, in coordination with the agency being supported, will determine whether a Ski Landing Area or Skiway will be established for a particular operation. Factors such as field elevation, density altitude and snow conditions will be considered to determine minimum length and width of the Ski Landing Area. A Ski Landing Area will not be less than 5,000 ft x 150 ft. Ski Landing Areas shall be marked as shown in **Figure 4.4.** The primary differences between Skiways and Ski Landing Areas are the absence of lead-in flags and, for a Ski Landing Area, fewer skiway flags. A midpoint marker will be established by placing red flags at the halfway point (five flags for a Skiway, three flags for a Ski Landing Area).

4.6. Surface Preparation And Maintenance. The agency being supported is responsible for preparing the surface.

4.6.1. Arctic / Antarctica (other than sea ice) operations on Open Snow, Ski Landing Areas and Skiways will be authorized by the Mission Commander in accordance with AFI 11-2C-130, Volume 3, *C-130 Operations Procedures*, and this Instruction.

4.6.1.1. Dragging is required to remove surface irregularities created by wind action (sastrugis) and to promote ice crystal deformation to harden the loose surface snow. Various types of drag devices have been successfully used.

4.6.1.2. The cargo offload/onload area (**Figure 4.2.**) should also be groomed to harden the surface prior to supporting cargo offload/onload operations.

4.6.1.3. Maintaining the Skiway or Ski Landing Area will require periodic dragging. The Skiway or Ski Landing Area should be dragged immediately after fresh snow accumulation, windstorms or when ski landings/takeoffs have disturbed the surface. Regular inspections by the ground party and pilot reports will determine if dragging or other maintenance action is required.

4.6.2. Glacial/Sea Ice Ski Landing Areas must be certified by a SLACO and authorized by a Mission Commander.

4.6.2.1. Ice irregularities, often hidden by snow cover can do significant damage to skis when struck at any speed. An ice crack with an edge of more than 4 inches may do damage at taxi speeds as the ski bridges the crack and a stress point is applied to the ski. Surface preparation must include a thorough survey of the landing area to look for ice irregularities and study snow depths and characteristics. Any unacceptable irregularities must be removed. If the resulting surface is acceptable, ski operations can begin after appropriate marking and certification. Snow irregularities may be large enough to require the entire surface to be dragged or graded to fill low areas and remove high areas. All undulating surfaces must be graded to minimize the slope and prevent ski damage. Care must be taken not to remove the entire snow surface down to bare ice because snow cushions and distributes loads during ski takeoffs and landings.

4.6.2.2. Cargo offload/onload areas and taxi routes to those areas should be groomed and marked as illustrated in **Figure 4.2.**

4.6.2.3. Weather and repeated ski operations can deteriorate Skiway surface conditions. Daily inspections by the ground party and pilot reports will determine maintenance requirements. Daily dragging or grading may be required to maintain an acceptable surface. Maintenance of flags and the cargo on/offload area are also required.

4.7. Flagging Guidance.

4.7.1. Minimum flagging for a Skiway should consist of the following (**Figure 4.1.**).

4.7.1.1. Lead-in Flags.

4.7.1.1.1. A set of four (4) black flags arranged to make a “plus sign” (+) at each lead-in flag location.

4.7.1.1.2. The first set of lead-in flags is located 1,000 ft from the skiway threshold along the extended skiway centerline.

4.7.1.1.3. The second set of lead-in flags will be spaced 500 ft from the first set.

4.7.1.1.4. The third set of lead-in flags will be spaced 500 ft from the second set.

4.7.1.1.5. All other sets of lead-in flags will be spaced 1,000 ft apart out to 12,000 ft from the skiway threshold to form a two-mile lead-in.

4.7.1.1.6. This spacing will require thirteen (13) sets of lead-in flags.

4.7.1.2. Skiway Flags.

4.7.1.2.1. Three (3) black flags at 400-foot intervals along the full length and on both sides of the skiway.

4.7.1.2.2. Five (5) red flags at the threshold, midpoint, and departure end locations on both sides of the skiway.

4.7.1.2.3. Three (3) "2,000 ft remaining" flags (black with a white number 2) on both sides of the skiway at the appropriate distance remaining from each skiway departure end.

4.7.2. Minimum flagging for a Ski Landing Area should consist of the following (**Figure 4.4.**).

4.7.2.1. Skiway Flags.

4.7.2.1.1. Two (2) black flags along the full length of both sides of the ski landing area at 500-foot intervals.

4.7.2.1.2. Three (3) red flags on both sides of the ski landing area at the threshold, midpoint, and departure end locations.

4.7.2.1.3. Two (2) "2,000 ft remaining" flags (black with a white number 2) on both sides of the ski landing area at the appropriate distance remaining from each departure end.

Figure 4.1. Skiway Marking.

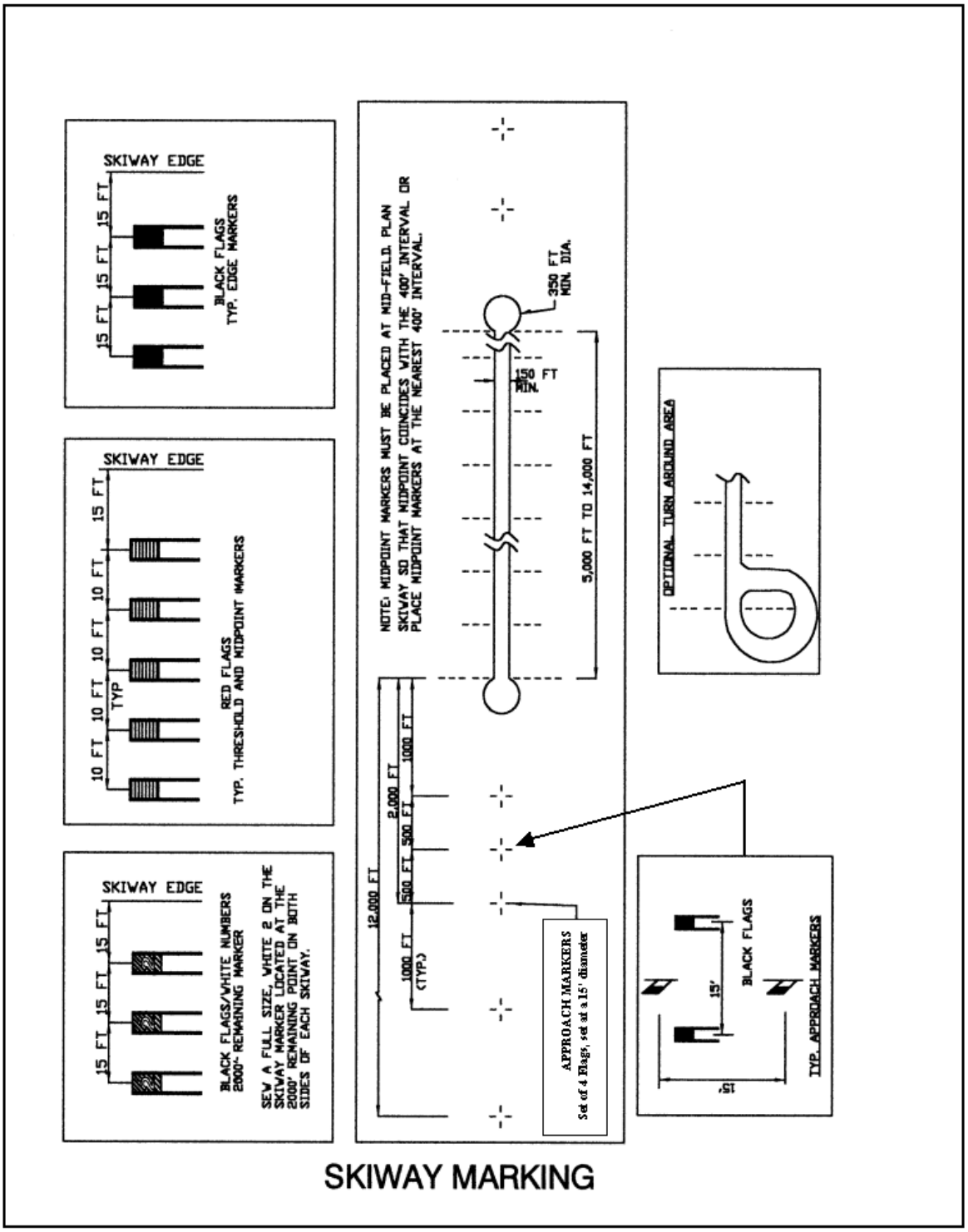

Figure 4.2. Cargo Offload/Onload Area.

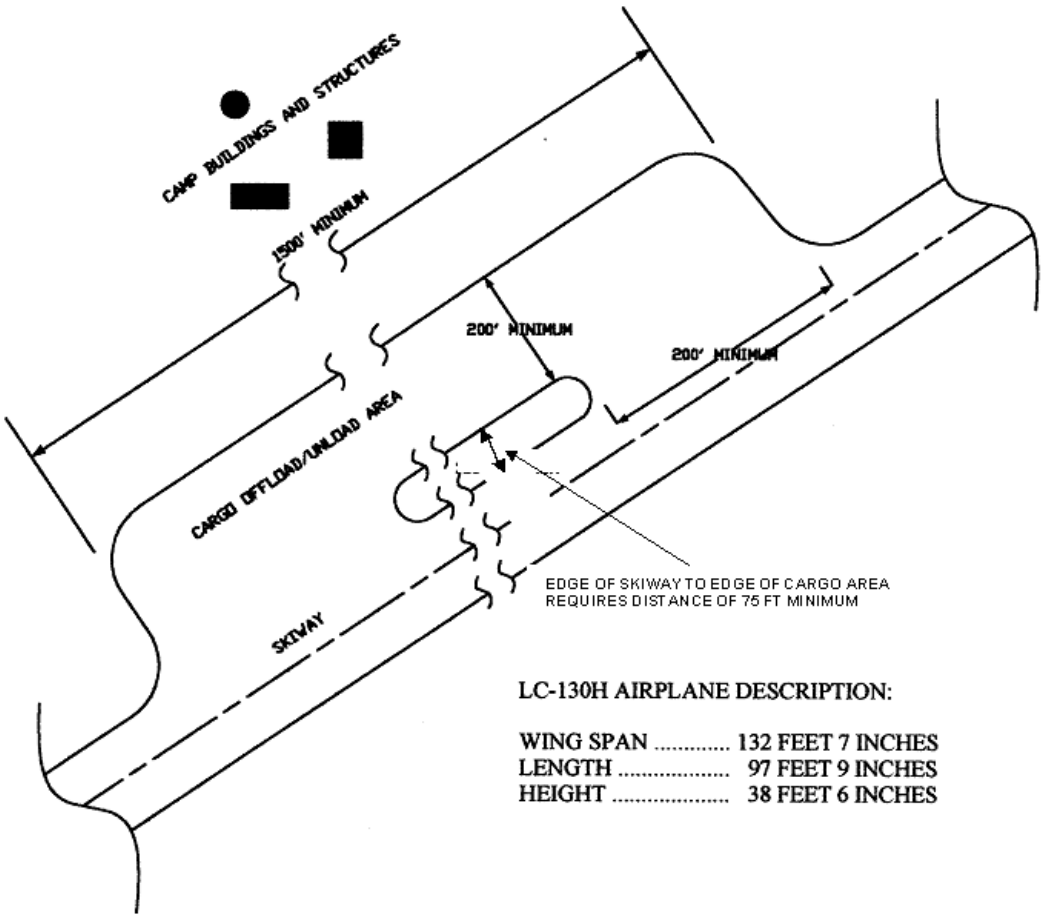

CARGO OFFLOAD / ONLOAD AREA

Figure 4.3. Typical Skiway Marker Construction.

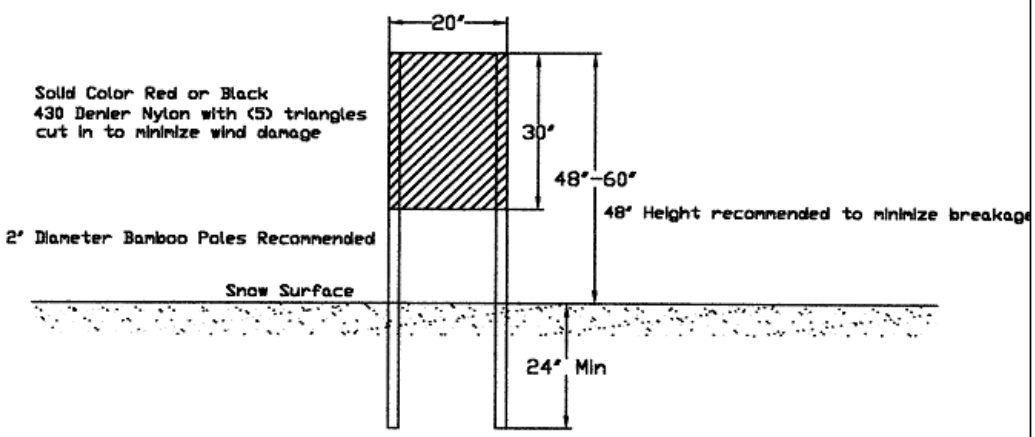

NOTE: If pole breakage due to high winds is a recurring problem, cut a hole or triangle up to a 3-inch diameter in the center of the flag.

Figure 4.4. Ski Landing Area Marking.

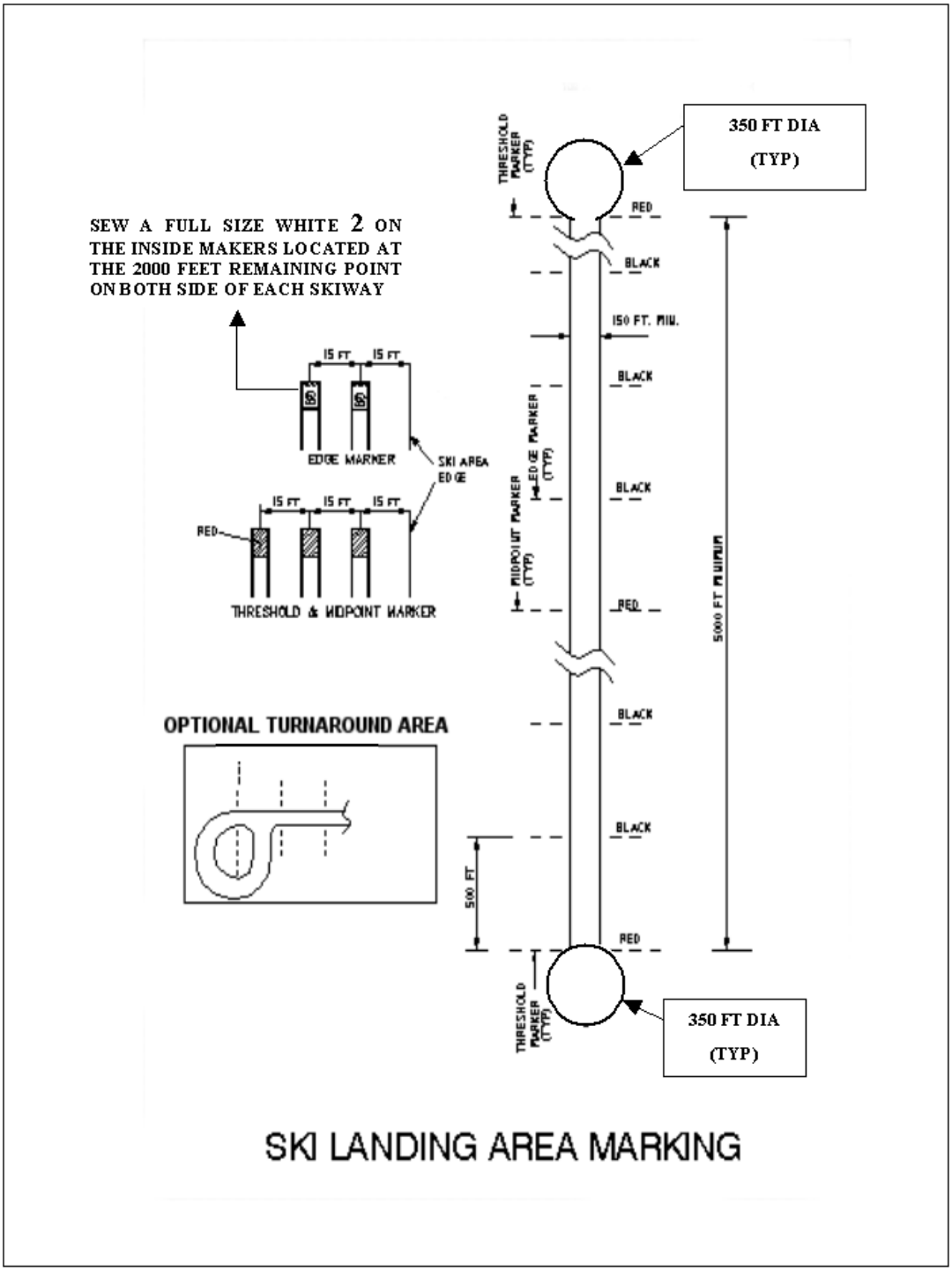

4.8. Forms Prescribed. AF Form 3822, **Landing Zone Survey**, AF Form 3823, **Drop Zone Survey**, AF Form 4303, **Helicopter Landing Zone Survey**, and AF Form 4304, **Drop Zone / Landing Zone Control Log**.

CHARLES L. WALD, Lt Gen, USAF
DCS, Air & Space Operations

Attachment 1

GLOSSARY OF REFERENCES AND SUPPORTING INFORMATION

References

Air Force Civil Engineering Support Activity Engineering Technical Letter 98-5, *C-130 and C-17 Contingency and Training Airfield Dimensional Criteria*, October 1998

Air Force Civil Engineering Support Activity Engineering Technical Letter 97-9, *Criteria for Design, Maintenance, and Evaluation of Semi-Prepared Airfields for Contingency Operations of the C-17 Aircraft*, November 1997

Vaudrey K.D., U.S. Naval Civil Engineering Lab, Technical Report R860, *Ice Engineering: Study of Related Properties of Floating Sea-Ice Sheets and Summary of Elastic and Visco-Elastic Analyses*, 1977

AIR STD 44/35G, *Drop Zones and Extraction Zones: Criteria, Markings and Information Check* Lists

AIR STD 44/37C, *Criteria for Selection and Marking of Landing Zones for Fixed Wing Aircraft*

STANAG 3146, *Planning Procedures for Tactical Air Transport Operations*

STANAG 3345, *Data/Forms for Planning Air Movements*

STANAG 3570, *Drop Zones and Extraction Zones*, and 3601, *Criteria for Selection and Marking of Landing Zones for Fixed-Wing Transport Aircraft*.

AFPD 13-2, *Air Traffic Control, Airspace, Airfield, and Range Management*

AFI 11-231, *Computed Air Release Point Procedures*

AFI 11-2C-130, Volume 3, *C-130 Operations Procedures*

AFI 11-410, *Personnel Parachute Operations*

AFJ 13-210(I), *Joint Airdrop Inspection Records, Malfunction Investigations, and Activity Reporting*

AFI 91-204, *Safety Investigations and Reports*

AFJPAM 32-8013, Volume II (FM 5-430-00-2), *Planning and Design of Roads, Airfields and Heliports in the Theater of Operations - Airfield and Heliport Design*

AFMAN 11-411(I), *Military Free-Fall Parachuting*

AFMAN 11-420(I), *Static Line Parachuting Techniques and Training*

AMCI 11-208, *Tanker/Airlift Operations*

AMCI 13-101, *AMC Theater Airlift Liaison Officers*

Abbreviations and Acronyms

ACA—Airspace Control Authority

ACC—Air Component Commander

AGL—Above Ground Level

AMP—Airfield Marking Pattern

ARFF—Aircraft Rescue And Fire Fighting

ASCC —Air Standardization Coordinating Committee

ATC—Air Traffic Control

AWADS—Adverse Weather Aerial Delivery System

CANLS —Contingency Airfield Night Lighting System

CARP—Computed Air Release Point

CCT—Combat Control Team (See Special Tactics)

CDS —Container Delivery System

COMAFSOF —Commander, Air Force Special Operations Forces

COMJSOTF —Commander, Joint Special Operations Task Force

CRRC—Combat Rubber Raiding Craft

CRL —Container Ramp Load

CRO —Combat Rescue Officer

CRS —Container Release System

DIRMOBFOR—Director Of Mobility Forces

DZ —Drop Zone

DZC —Drop Zone Controller

DZSO —Drop Zone Safety Officer

DZST —Drop Zone Support Team

DZSTL —Drop Zone Support Team Leader

ETL —Engineering Technical Letter

FAA —Federal Aviation Administration

FARP —Forward Arming and Refueling Point

GAR-I —Ground-To-Air Responder/Interrogator

GMRS —Ground Marked Release System

GPS —Global Positioning System

GFR—General Flight Rules

HAARS —High Altitude Airdrop Resupply System

HAHO —High Altitude High Opening Parachute Technique

HALO—High Altitude Low Opening Parachute Technique

HARP—High Altitude Release Point

HE—Heavy Equipment

HLZ—Helicopter Landing Zone

HN —Host Nation

HSLLADS —High Speed Low Level Aerial Delivery System

HVCDS —High Velocity Container Delivery System

ICAO—International Civil Aviation Organization

IFR—Instrument Flight Rules

IMC—Instrument Meteorological Conditions

JFACC —Joint Force Air Component Commander

JFSOCC —Joint Force Special Operations Component Commander

JMD—Jumpmaster Directed

JSOACC —Joint Special Operations Air Component Commander

LZ —Landing Zone

LZC —Landing Zone Controller

LZSO —Landing Zone Safety Officer

MAF—Missile Alert Facility

MAAS —Mobile Aircraft Arresting System

MDS—Mission Design Series

MEW—Mean Effective Wind

MMLS— Mobile Microwave Landing System

MPI— Multiple Points Of Impact

MSL— Mean Sea Level

NOTAM— Notice To Airmen

NVG—Night Vision Goggle

OPCON— Operational Control

PI—Point(s) Of Impact

RAM— Raised Angle Marker

RCL—Reception Committee Leader

RPI—Random Points Of Impact

SATB—Standard Airdrop Training Bundle

SKE—Station Keeping Equipment

SLACO—Skiway Landing Area Control Officer

SOLL—Special Operations Low Level

ST—Special Tactics

STO—Special Tactics Officer

STS—Special Tactics Squadron

STANAG— Standardization Agreement (NATO)

TACAN—Tactical Air Navigation

TALO—Theater Airlift Liaison Officer

TOT—Time On Target

VIRS—Verbally Initiated Release System

VFR—Visual Flight Rules

VMC—Visual Meteorological Conditions

WDI—Wind Drift Indicator

ZAR—Zone Availability Report

ZM—Zone Marker

Terms

Air Component Commander—The Commander Air Force Forces or Joint Force Air Component Commander; Joint Force Special Operations Component Commander or Joint Special Operations Air Component Commander.

Airlift Coordination Cell—A cell within the air operations center, which plans, coordinates, manages and executes theater airlift operations in the area of responsibility or joint operations area. Normally consists of an airlift plans branch, an airlift operations branch, and an airlift logistics branch. (Joint Pub 1-02)

Air Mobility Element—The air mobility element is an extension of the Air Mobility Command Tanker Airlift Control Center deployed to a theater when requested by the geographic combatant commander. It coordinates strategic airlift operations with the theater airlift management system and collocates with the air operations center whenever possible. (Joint Pub 1-02)

Airfield Marking Pattern—A system of designations that differentiate between the various types of airfield markings.

Class D Airspace—Category of controlled airspace, which generally consists of the area from the surface to 2,500 feet above ground level surrounding airports with an operational tower. Separation services are provided to visual flight rules aircraft on a workload-permitting basis.

Class G Airspace—Class G airspace (uncontrolled) is that portion of the airspace that has not been designated as Class A, Class B, Class D, or Class E airspace.

Direct Air Delivery—The strategic air movement of cargo or personnel from an airlift point of embarkation to a point as close as practicable to the user's specified final destination, thereby minimizing transshipment requirements. Direct air delivery eliminates the traditional Air Force two-step strategic and theater airlift transshipment mission mix.

Director of Mobility Forces—The Director of Mobility Forces will normally be a senior officer who is familiar with the area of responsibility or joint operations area and possesses an extensive background in airlift operations. When established, the Director of Mobility Forces serves as the designated agent for all airlift issues in the area of responsibility or joint operations area, and for other duties as directed. The Director of Mobility Forces exercises coordinating authority between the airlift coordination cell, the air mobility element, the Tanker Airlift Control Center, the joint movement center, and the air operations center in order to expedite the resolution of airlift problems. The Director of Mobility Forces may be sourced from the theater's organizations, United States Transportation Command, or United States Joint Forces Command.

Drop Zone Controller—Qualified individual in charge of a drop zone operation who represents the appropriate commander as provided in the mission directive.

Drop Zone Safety Officer—The appointed representative of the supported forces commander who is responsible for the safe operation of the drop zone. Specific duties and responsibilities vary according to the using airborne unit's standard operating procedures.

Drop Zone Support Team—Qualified U.S. Army/Marine Corps team responsible for supporting drop zone operations in accordance with this publication and memorandum of agreement.

Drop Zone Support Team Leader—Individual in charge of U.S. Army/Marine Corps drop zone support team leader.

Ground Marked Release System—A procedure used by ground forces to determine and mark the release point for an airdrop.

Helicopter Landing Zone—A specified ground area for landing helicopters to embark or disembark troops and/or cargo. A landing zone may contain one or more landing sites.

Joint Force Air Component Commander—The commander within a unified command, subordinate unified command, or joint task force responsible to the establishing commander for making recommendations on the proper employment of assigned, attached, and/or made available for tasking air forces; planning and coordinating air operations; or accomplishing such operational missions as may be assigned. The air component commander is given the authority necessary to accomplish missions and tasks assigned by the establishing commander.

Joint Force Special Operations Component Commander—The commander within a unified command, subordinate unified command, or joint task force responsible to the establishing commander for making recommendations on the proper employment of assigned, attached, and/or made available for tasking special operations forces and assets; planning and coordinating special operations; or accomplishing such special operational missions as may be assigned. The joint force special operations component commander is given the authority necessary to accomplish missions and tasks assigned by the establishing commander.

Joint Special Operations Air Component Commander—The commander within the joint force special operations command responsible for planning and executing joint special air operations and for coordinating and deconflicting such operations with conventional nonspecial operations air activities. The joint special air operations component commander normally will be the commander with the preponderance of assets and/or greatest ability to plan, coordinate, allocate, task, control, and support the assigned joint special operations aviation assets. The joint special operations air component commander

may be directly subordinate to the joint force special operations component commander or to any nonspecial operations component or joint force commander as directed.

Landing Zone—A prepared or semi-prepared (unpaved) airfield used to conduct operations in an airfield environment similar to forward operating locations. Landing Zone runways are typically shorter and narrower than standard runways. The amount of engineering effort required to develop a semi-prepared Landing Zone depends on the planned operation, the service life needed to support these operations, and the existing soil and weather conditions. Semi-prepared construction/maintenance preparations may range from those sufficient for limited use to those required for continuous routine operations. Options for surface preparation may include stabilization, addition of an aggregate course, compaction of in-place soils, or matting. Since training airfields are constructed for long-term operations, semi-prepared surface structural requirements are more stringent than for contingency airfields.

Landing Zone Controller—Individual performing air traffic control duties during landing zone operations.

Landing Zone Safety Officer—Qualified combat controller, officer aircrew, or qualified civilian contractor personnel in charge of the landing zone operation.

Mean Effective Wind—A theoretical wind of constant velocity and direction, extending from the surface to a predetermined altitude above the ground.

Military Free Fall—An employment concept encompassing both high altitude low opening and high altitude high opening techniques of parachuting.

Night—The time between the end of evening civil twilight and the beginning of morning civil twilight, as published in the American Air Almanac, converted to local time. (ref AFI 11-202, Volume 3, *General Flight Rules*)

Operational Control—Command authority that may be exercised by commanders at any echelon at or below the level of combatant command. Operational control is inherent in combatant command (command authority) and may be delegated within the command. When forces are transferred between combatant commands, the command relationship the gaining commander will exercise (and the losing commander will relinquish) over these forces must be specified by the Secretary of Defense. Operational control is the authority to perform those functions of command over subordinate forces involving organizing and employing commands and forces, assigning tasks, designating objectives, and giving authoritative direction necessary to accomplish the mission. Operational control includes authoritative direction over all aspects of military operations and joint training necessary to accomplish missions assigned to the command. Operational control should be exercised through the commanders of subordinate organizations. Normally this authority is exercised through subordinate joint force commanders and Service and/or functional component commanders. Operational control normally provides full authority to organize commands and forces and to employ those forces as the commander in operational control considers necessary to accomplish assigned missions; it does not, in and of itself, include authoritative direction for logistics or matters of administration, discipline, internal organization, or unit training.

Point of Impact—The point on the drop zone where the first parachutist or airdropped cargo item lands or is expected to land.

Raised Angle Marker—A device used to mark the point of impact during airdrops. A triangular shaped marker constructed of bright orange material, six feet wide at the base (minimum) and six feet high (minimum), displayed at a 60-degree angle into the direction of flight.

Ram Air Parachute System—US Army equivalent of a High Glide Ratio Parachute.

Release Point—The point over the drop zone where personnel or equipment should exit the drop aircraft.

Safety Zone—A distance established by agreement between the air mission commander and the supported forces' commander subtracted from the DZ trailing edge to reduce the potential for off-DZ drops. For peacetime personnel airdrops, the safety zone will never be less than 200 yards. Do not compute safety zone distances for airdrops supporting unconventional warfare forces as defined by the Joint Strategic Capabilities Plane Annex E, or high altitude low opening/high altitude high opening airdrops.

Ski Landing Area—A designated area for LC-130 ski operations not meeting the criteria for a Skiway, but marked and maintained in accordance with this instruction

Skiway—A designated area for LC-130 ski operations marked and maintained in accordance with this instruction. Skiways must have a published instrument or visual approach procedure and be located near a surface camp with support facilities to include weather reporting, shelter, first aid, food, communications and grooming on a continual basis.

Skiway Landing Area Control Officer—An experienced LC-130 pilot or combat controller experienced in LC-130 ski operations responsible for certifying a Skiway Landing Area.

Station Keeping Equipment—An aircraft avionics system used to maintain formation position in instrument meteorological conditions. When used in conjunction with an adverse aerial delivery system lead aircraft, instrument meteorological conditions airdrops are possible. C-130, C-141, and C-17 station keeping equipped aircraft have an instrument meteorological conditions airdrop capability when employed with a ground-based zone marker.

Special Operations Forces—Those active and reserve component forces of the Military Services designated by the Secretary of Defense and specifically organized, trained, and equipped to conduct and support special operations.

Special Operations Low Level—C-17, C-141 and C-5 qualified aircrews that support special operations using non-standard procedures and criteria, including operations using night vision goggles. Air Mobility Command provides night vision goggle trained C-130 crews capable of using procedures similar to special operations low-level aircrew.

Special Tactics Team—United States Air Force special operations consisting of combat control, pararescue, and combat weather personnel who are organized, trained, and equipped to establish and control the air-ground interface at an airhead in the objective area. Functions include assault zone reconnaissance and surveillance, establishment, and terminal control; combat search and rescue; combat casualty care and evacuation staging; special operations terminal attack; and tactical weather observations and forecasting.

Theater Airlift Liaison Officer—An officer specially trained to implement the theater air control system and to control tactical airlift assets. Theater airlift liaison officers are highly qualified, rated airlift officers, with tactical (airdrop) airlift experience, and assigned duties supporting US Army units.

Trailing Edge of a Drop Zone—Represents the imaginary line extending between the left and right rear corners of a surveyed drop zone.

Unilateral—Describes an Air Force only operation. A unilateral mission will not be considered a joint operation merely because the parachutists or loads are from another service. Example: an Air Force reserve airlift unit conducting training airdrop missions using Army paratroopers or when Army paratroopers jump with Air Force personnel on an Air Force unit's operation.

Visual Initiated Release System—A method of positioning aircraft for airdrop by verbal instruction from the Drop Zone Controller.

Visual Meteorological Conditions—Weather conditions where visual flight rules apply; expressed in terms of visibility, ceiling height, and aircraft clearance from clouds along the path of flight. When these criteria do not exist, instrument meteorological conditions prevail and instrument flight rules must be followed.

Wind Drift Indicator—A 5 to 6 foot length of paper (approximately).

Zone Marker—An electronic NAVAID used by specially equipped aircraft to aid in positioning over the landing zone, drop zone, or release point.

Attachment 2

WIND/SEA STATE PREDICTION CHART

A2.1. Wind/Sea State Prediction Chart. Use **Table A2.1.** to predict the sea state for water DZ airdrops.

Table A2.1. Wind/Sea State Prediction Chart.

Wind Velocity (Knots)	Wind Force (Beaufort)	Average Wave Height (Feet)	Sea Indications	Sea State
0	0	0	Like mirror.	0
Calm 1 - 3	1	0.05	Ripples with appearance of scales	0
Light Air 4 - 6	2	0.18	Small wavelets; crests have glassy appearance but do not break.	1
Light Breeze 7 - 10	3	0.6	Large wavelets; crests begin to break; scattered whitecaps.	2
Gentle Breeze 11 - 16	4	2.0	Small waves, becoming longer. Fairly frequent whitecaps	3
Moderate Breeze 17 - 21	5	4.3	Moderate waves, taking a pronounced long form; many whitecaps.	4
Fresh Breeze 22 -27	6	8.2	Large waves begin to form; white foam crests more extensive; some spray.	5
Strong Breeze 28 - 33	7	14	Sea heaps up, white foam from breaking waves blown in streaks along direction of waves.	6
Moderate Gale 34 - 40	8	30	Moderately high waves of greater length; crests break into spindrift; foam blown in well marked streaks in direction of wind.	7
Fresh Gale 41 - 47	9	36	High waves. Dense streaks of foam; sea begins to roll; spray affects visibility.	8

Wind Velocity (Knots)	Wind Force (Beaufort)	Average Wave Height (Feet)	Sea Indications	Sea State
Strong Gale 48 - 55	10	52	Very high waves with overhanging crests; foam in great patches blown in dense white streaks. Whole surface of the sea takes on a white appearance. Visibility- affected.	9
Storm 56 - 63	11	64	Exceptionally high waves (64 feet). Sea is covered with long white patches of foam Edges of wave crests are blown into froth. Visibility seriously affected.	9.1
Violent Storm (Hurricane) 64 - 136+	12-17	80 (est.)	Air filled with foam (80+feet). Sea is white. Visibility very seriously affected.	9.2

Attachment 3

STANDARD/METRIC CONVERSION CHART

A3.1. Standard/Metric Conversion Chart. Use **Table A3.1.** for standard conversions.

Table A3.1. Standard/Metric Conversion Chart.

STANDARD/METRIC CONVERSION CHART Factors for Conversion of Units To convert A to B, multiply A by C. To convert B to A, multiply B by D.			
UNIT A LENGTH	**UNIT C**	**UNIT D**	**UNIT B**
Statute Miles	5,280.0	0.0001894	Feet
Statute Miles	1.609	0.6214	Kilometers
Nautical Miles	1.1516	0.8684	Miles
Meters	3.281	0.3048	Feet
Kilometers	3,281.0	0.0003048	Feet
Yards	3.0	0.33333	Feet
Inches	2.540	0.3937	Centimeters
Feet	0.1667	6.0	Fathoms
VELOCITIES			
Miles Per Hour (Statute)	1.467	0.6818	Ft. Per Second
Meters Per Second	3.281	0.3048	Ft. Per Second
Meters Per Second	2.237	0.4470	Miles Per Hr. (Statute)
Yards/Second	2.355	0.4246	Knots
WEIGHT			
Ounces	0.0625	16.0	Pounds
Pounds	7000.0	0.0001429	Grains
Kilograms	2.205	0.4536	Pounds
Short Tons	2000.0	0.0005	Pounds
Short Tons	0.91	1.0989	Long Tons
Long Tons	1120.0	0.8729	Short Tons
ANGULAR MEASURE			
Circle	360.0		Degrees
Degrees	60.0	0.1667	Minutes
Degrees	17.8	0.056	Mils
Mils	3.27	0.296	Minutes
Minutes	60.0	0.01667	Seconds
TEMPERATURE CONVERSION To convert Fahrenheit to Centigrade, subtract 32 degrees and multi ply by 5, then divide by 9. To convert Centigrade to Fahrenheit, multiply by 9, divide by 5, and add 32 degrees.			

Attachment 4

AF FORM 3823, DROP ZONE SURVEY

A4.1. AF Form 3823, Drop Zone Survey. Use these instructions to complete AF Form 3823. All blocks require an entry including "N/A" if non-applicable.

A4.1.1. Block 1.

A4.1.1.1. Block 1A. Enter DZ name.

A4.1.1.2. Block 1B. If the survey will be submitted to HQ AMC/DOTK for inclusion in the ZAR database, then leave blank. If the survey is for local use then the group tactics office should fill in.

A4.1.2. Block 2.

A4.1.2.1. Block 2A. Enter the Country where the DZ is located.

A4.1.2.2. Block 2B. Enter the state, province, territory, etc.

A4.1.3. Block 3. Enter map series, sheet number, edition, and date of map used.

A4.1.4. Block 4.

A4.1.4.1. Blocks 4A1 through 4A4. Enter the date the original survey was conducted, surveyor's name, grade, telephone number, and unit of assignment. The surveyor will sign above their typed name.

A4.1.4.2. Block 4B. The surveyor will fill out this item. Enter approval or disapproval symbol for each drop category by using the letter "A" for approved, and the letter "D" for disapproved. Leave no blank spaces under the preprinted categories. The blank column is for additional special approvals.

A4.1.4.3. Block 4C. The ground operations approval authority will verify and sign.

A4.1.4.4. Block 4D. A safety-of-flight review is completed by the chief, group tactics, or as assigned by the OG/CC or equivalent, on all DZ surveys. Safety-of-flight reviewer's signature gives authority for the aircraft to conduct operations over the DZ.

A4.1.4.5. Block 4E. Once this block is signed, the DZ is ready for use. Signing authority is the OG/CC or the ACC.

A4.1.4.5.1. If operational requirements dictate, forward the survey to HQ AMC/DOK, 402 Scott Drive, Unit 3A1, Scott AFB IL 62225-5320, to maintain the most current data in the ZAR database.

A4.1.4.5.2. Group Tactics offices are the local area repositories for DZ surveys.

A4.1.5. Block 5.

A4.1.5.1. Blocks 5A through 5E. Enter the controlling agency responsible for scheduling the DZ. If the DZ is within a controlled or monitored area, enter the range control data for that location. If the DZ is not located on government owned property. It may be necessary to obtain a Land Use Agreement (LUA) or Memorandum of Understanding (MOU). This is the responsibility of the requesting unit. Check the block that applies and attach a copy of memorandum if applicable. If the DZ is within a controlled area, enter the range control data needed for that location.

A4.1.6. Block 6.

A4.1.6.1. Block 6A through 6C. Enter the DZ dimensions using either meters or yards. Enter the DZ radius for a circular DZ.

A4.1.6.2. Block 6D and 6E. N/A.

A4.1.6.3. Blocks 6F through 6H. Enter the distance from the leading edge of the DZ to each point of impact using either meters or yards.

A4.1.7. Blocks 7A through 7D. Enter the primary DZ axis in magnetic, grid, and true north, and date of variation for that location. Use the current year when obtaining the information from a GPS. If DZ is circular, enter N/A. List applicable DZ axis restrictions in remarks.

A4.1.8. Block 8A through 8D. Enter the elevation in mean sea level (MSL) for each point of impact as well as the highest point on the DZ.

A4.1.9. Block 9.

A4.1.9.1. Block 9A. Enter the spheroid used in computing coordinates for the DZ. This information can be found on the map legend. If you use the GPS in WGS-84, then enter the ellipsoid (WGS-84) in this block.

A4.1.9.2. Block 9B. Enter the datum used in coordinate computation. This information is in the legend information on the map. If the GPS is used, enter WGS-84.

A4.1.9.3. Blocks 9C through 9E. Enter grid zone, Easting, and Northing obtained from the map.

A4.1.9.4. Block 9F. If yes, enter the figure of merit from the GPS equipment.

A4.1.9.5. Block 9G. Enter the grid zone designator, grid square identifier, and the eight-digit UTM coordinates. Include a short verbal description of an easily recognized point on or near the DZ (i.e., road intersection, benchmark, pond, etc.) that can be used by the DZ party to find the PIs. Include a distance and azimuth from this point to the nearest PI. Continue the Point of Origin remarks in the Remarks section of the form if necessary.

A4.1.9.6. Block 9H. Enter the eight-digit UTM coordinates in local datum and spheroid and the WGS 84 latitude/longitude coordinates to the nearest one hundredth minute for each indicated point.

A4.1.9.7. Block 9I. Enter the eight-digit UTM coordinates in local datum and spheroid and the WGS 84 latitude/longitude coordinates to the nearest one hundredth minute for each corner of the DZ. Enter N/A for timing points.

A4.1.10. Block 10. Provide a legible sketch or CAD drawing of the DZ including all obstacles or prominent features located within the DZ boundaries. Include an arrow indicating magnetic north to assist in sketch orientation. Enter DZ name in space indicated.

A4.1.11. Block 11. Include any pertinent comments regarding operations on the DZ. Also include any statements concerning safety in the DZ area (i.e., hazards, towers, etc.). Annotate all charted or observed bodies of water and power lines within 1,000 meters of the DZ boundaries.

A4.1.12. Block 12. Indicate in the appropriate section whether photographs of the DZ and approaches are available and whether a low level route is associated with the DZ. Individual completing the safety-of-flight review should know this information and will mark accordingly.

NOTE: When performing a safety-of-flight review on a foreign DZ, as much information as possible should be filled in on the AF Form 3823. At a minimum, the following items must be filled in: Items 4D, 6A, 6B, 7, 9A-F, and 9H. A copy of the foreign DZ should be attached to the safety-of-flight review.

Attachment 5

AF FORM 3822, LANDING ZONE SURVEY

A5.1. AF Form 3822. Use these instructions to complete the AF Form 3822. All blocks require an entry including "N/A" if non-applicable.

A5.1.1. Block 1.

A5.1.1.1. Block 1A. Enter LZ name.

A5.1.1.2. Block 1B. If the survey will be submitted to HQ AMC/DOTK for inclusion in the ZAR database, then leave blank. If the survey is for local use then the group tactics office should fill in.

A5.1.2. Block 2.

A5.1.2.1. Block 2A. Enter the Country where the LZ is located.

A5.1.2.2. Block 2B. Enter the state, province, territory, etc.

A5.1.3. Block 3. Enter map series, sheet number, edition, and date of map used.

A5.1.4. Block 4.

A5.1.4.1. Block 4A. Enter the date the original survey was conducted, and surveyor's name, grade, telephone number, and unit of assignment. The surveyor will sign on top of their typed name.

A5.1.4.2. Block 4B. Enter the date the survey was reviewed, reviewer's name, grade, telephone number, unit and location, and signature. The reviewer is the chief, group tactics, or as designated by the OG/CC.

A5.1.4.3. Block 4C. Enter the date the survey was approved, or disapproved, and approver's name, grade, telephone number, unit of assignment, and signature. The approval authority is the MAJCOM/DO or ACC.

A5.1.4.3.1. If operational requirements dictate, forward the survey to HQ AMC/DOK, 402 Scott Drive, Unit 3A1, Scott AFB IL 62225-5320, to maintain the most current data in the ZAR database.

A5.1.4.3.2. Group Tactics offices are the local area repositories for LZ surveys.

A5.1.5. Block 5. Enter the controlling agency responsible for scheduling the LZ. If the LZ is within a controlled or monitored area, enter the range control data for that location. If the LZ is not located on government owned property. It may be necessary to obtain a Land Use Agreement (LUA) or Memorandum of Understanding (MOU). This is the responsibility of the requesting unit. If the LZ is within a controlled area, enter the range control data needed for that location.

A5.1.6. Block 6. Self-explanatory. Unit of measure is feet.

A5.1.7. Blocks 7A through 7D. Enter the primary LZ run-in heading in magnetic, grid, and true north, and date of variation for that location. Use the current year when obtaining the information from a GPS.

A5.1.8. Block 8A through 8C. Enter the elevation in mean sea level (MSL) for each point.

A5.1.9. Block 9.

A5.1.9.1. Block 9A. Enter the spheroid or ellipsoid and datum (e.g., Clark 1866, NAD1927) use to compute latitude and longitude. If you use the GPS in WGS-84, then enter the ellipsoid (WGS-84) in this block.

A5.1.9.2. Block 9B. If yes, enter the figure of merit from the GPS equipment.

A5.1.9.3. Blocks 9C through 9E. Enter grid zone, Easting, and Northing obtained from the map.

A5.1.9.4. Block 9F. Enter the grid zone designator, grid square identifier, and the eight-digit UTM coordinates in local datum and spheroid and the WGS-84 latitude and longitude to the nearest one hundredth minute for the LZ center point, runway approach end, and departure end.

A5.1.9.5. Block 9G and 9H. Enter the eight-digit UTM coordinates in local datum and spheroid and the WGS 84 latitude and longitude to the nearest one-hundredth minute for the LZ center point, runway approach end, and departure end.

A5.1.10. Block 10.

A5.1.10.1. Blocks 10A through 10C. Enter the type of LZ surface (e.g., clay, asphalt, etc.).

A5.1.10.2. Block 10B. Enter appropriate data. Indicate whether the weight bearing capacity is actual or estimated (See AFJPAM 32-8013, Volume II, figure I-1 and J-2).

A5.1.10.3. Blocks 10C and 10D. Enter appropriate data.

A5.1.11. Block 11. Use runway designator noted in item 7A for 11A through 11E.

A5.1.11.1. Block 11A. Enter the glideslope ratio used to determine obstacles in the approach and climb-out zones.

A5.1.11.2. Block 11B. Enter the glideslope ratio used to determine obstacle penetration in the lateral safety zones.

A5.1.11.3. Block 11C. Enter longitudinal gradient of the LZ. Use “+” for upslope and “-” for downslope, and include the percentage of slope.

A5.1.12. Block 12.

A5.1.12.1. Blocks 12A – 12E. Enter average transverse section gradients for the areas listed. Use “+” for upslope and “-” for downslope, and include the percentage of slope.

A5.1.12.2. Block 12F. Enter any obstacle penetrations.

A5.1.13. Block 13. Provide a legible sketch or CAD drawing of the LZ including all obstacles, obstructions, and prominent features located within the LZ boundaries. Annotate the distance these items are from the LZ in the remarks section or depict on the LZ sketch. Include an arrow indicating magnetic north.

A5.1.14. Block 14. Include any pertinent comments regarding operations on the LZ. Also include any statements concerning safety in the LZ area (i.e., hazards, towers, etc.).

A5.1.15. Block 15. Indicate in the appropriate section whether photographs of the LZ are available and whether a low level route is associated with the LZ. Individual completing the safety-of-flight review should know this information and will mark accordingly.

Attachment 6

AF FORM 4303, HELICOPTER LANDING ZONE SURVEY

A6.1. AF Form 4303, Helicopter Landing Zone (HLZ) Survey . Use the instructions listed below to complete AF Form 4303. All blocks require an entry, including “N/A” if non-applicable.

A6.1.1. Block 1.

A6.1.1.1. Block 1A. Enter HLZ name.

A6.1.1.2. Block 1B. If the survey will be submitted to HQ AMC/DOTK for inclusion in the ZAR database, then leave blank. If the survey is for local use then the group tactics office should fill in (or to the office designated by the AFSPC/DO).

A6.1.2. Block 2.

A6.1.2.1. Block 2A. Enter the Country where the LZ is located.

A6.1.2.2. Block 2B. Enter the state, province, territory, etc.

A6.1.3. Block 3. Enter the map series, sheet number, edition, and date of map used.

A6.1.4. Block 4.

A6.1.4.1. Block 4A. Enter the date the original survey was conducted, and surveyor’s name, grade, telephone number, and unit of assignment. The surveyor will sign above their typed name.

A6.1.4.2. Block 4B. Enter the date the survey was reviewed, reviewer's name, grade, telephone number, unit and location, and signature. The reviewer, in order of preference, is the chief, group tactics, squadron commander, or squadron operations officer (or to the office designated by the AFSPC/DO).

A6.1.4.3. Block 4C. Enter the date the survey was approved, or disapproved, and approver’s name, grade, telephone number, unit of assignment, and signature. The approval authority is the OG/CC or ACC.

A6.1.5. Blocks 5A and 5B. Enter the controlling agency responsible for scheduling the HLZ. If the HLZ is within a controlled or monitored area, enter the range control data for that location. If the HLZ is not located on government owned property, it may be necessary to obtain a Land Use Agreement (LUA) or Memorandum of Understanding (MOU). This is the responsibility of the requesting unit. If applicable, attach the LUA/MOU to the survey when it is submitted unit or agency responsible for scheduling the HLZ (if applicable). If the HLZ is within a controlled area, enter the range control data needed for that location.

A6.1.6. Blocks 6A through 6D. Enter the primary HLZ run-in heading in magnetic, grid, true north, and date of variation for that location. Base this heading on the long axis and or approach/departure obstructions. Use the current year when obtaining the information from a GPS.

A6.1.7. Block 7.

A6.1.7.1. Block 7A. Enter the spheroid or ellipsoid and datum (Clark 1866, NAD 1927) used in computing coordinates for the HLZ. This information can be found on the map legend. If GPS is used, put WGS-84 as the ellipsoid in this block.

A6.1.7.2. Block 7B. If GPS equipment was used, mark “YES” and enter the figure of merit (FOM). Precision is important when defining the HLZ center point, and a FOM of 2 or better is desired.

A6.1.7.3. Blocks 7C through 7E. Coordinates should be taken from the center point of the HLZ. Enter grid zone designator and grid square identifier obtained from the map.

A6.1.7.4. Block 7F. Enter the eight-digit UTM coordinates in local datum and spheroid and the WGS 84 latitude and longitude to the nearest one-hundredth minute for the HLZ center point. If computations were done in North American Datum 1927 (NAD-27/NAS-C), conversions can be accomplished using either the GPS or the MADTRANS conversion program.

A6.1.8. Block 8.

A6.1.8.1. Block 8A and 8B. Enter dimensions of the HLZ in feet of long axis by short axis (e.g., 480 x 220 feet). The dimensions of the HLZ describe the portion that has been surveyed. Areas outside the described HLZ dimensions are not surveyed for landing or alternate insertion/extraction.

A6.1.8.2. Block 8C. Enter elevation in feet MSL taken from the HLZ center point.

A6.1.8.3. Block 8D.

A6.1.8.3.1. A minimum of two rotor diameters is required for single-ship training. Use the following square dimensions to determine single-ship HLZs: MH-53 = 150’ (72’ rotor diameter); UH-1 = 100’ (48’ rotor diameter); CV-22=170’(85’ rotor diameter); HH-60 = 110’ (54’ rotor diameter).

A6.1.8.3.2. For multiship operations, multiply single-ship dimensions by the number of aircraft to determine HLZ capacity (e.g., a 4-ship of MH-53s would require a 600 ft x 150 ft long HLZ).

A6.1.8.3.3. For contingency operations use the following dimensions to determine single-ship HLZs: MH-53 use 125 ft W x 140 ft L; CV-22 use 135 ft W x 110 ft L; HH-60 use 105’ W x 115’ L. UH-1 use 25-foot clearance from any portion of the helicopter to the nearest obstacle. For multiship operations, multiply the number of aircraft by 150 ft W x 150 ft L (i.e., a 4-ship of MH-53s would require a 600 ft W x 150 ft L HLZ).

A6.1.8.4. Block 8E. Annotate obstructions to approach and departure. Use block 9 for additional space, and illustrate those obstructions in block 10.

A6.1.8.5. Block 8F. Enter HLZ surface conditions (e.g. grass asphalt, fine dust, etc.). Exercise extreme care to document the possibility of brown/white out conditions, blowing grass, or any other flying debris that may restrict visibility or damage aircraft or personnel. Annotate additional remarks in block 9.

A6.1.8.6. Block 8G. Enter degrees of slope based on survey approach axis. Enter upslope as "+"; enter downslope as "-". Enter the HLZ right slope in the same manner. For example, a +2 to -.5 degrees HLZ indicates a 2-degree upslope and a negative .5-degree right downslope on the surveyed approach heading.

A6.1.8.6.1. MH-53 slope limits: 9.6 degrees left/right wheel-up and nose-up, no tolerable downslope.

A6.1.8.6.2. UH-1 slope limits: 10 degrees.

A6.1.8.6.3. CV-22 slope limits: no data available.

A6.1.8.6.4. HH-60 slope limits: 6 degrees nose-down, 15 degrees nose-up, 15 degrees left/right. Aircrew will subtract 2 degrees from each limit for each 5 knots of wind.

A6.1.9. Block 9. Remarks as required.

A6.1.10. Block 10. Provide detailed diagram of the HLZ. A computer-generated diagram is desired but not required (See **Figure A6.7.**). At a minimum, display all prominent landmarks and man-made or natural features that may help identify the HLZ (i.e. roads, rivers, buildings, etc.). Indicate the recommended approach axis and include an arrow designating true north. Document and describe all hazards both within the boundaries of the HLZ (e.g. rocks, tree stumps, holes, depressions, mounds, fences, poles, trees, wires, ditches, etc.) as well as hazards to the approach (e.g. wires, towers, poles, trees). A remark in bold letters must be included if the potential for brown/white out conditions exist. Unit HLZs used for day-to-day training should include aerial photography and/or imagery. Other HLZ surveys should be supplemented with aerial photography and/or imagery whenever possible.

A6.1.11. Block 11. Annotate if photography is available and attach.

NOTE: When reviewing a foreign HLZ, as much information as possible should be filled in on the AF Form 4303. At a minimum, the following items must be filled in: Items 4B, 6, 7, and 8. A copy of the foreign HLZ should be attached to the review.

Figure A6.1. MH-53 Helicopter Landing Zone Size.

Operational Weight (Empty) - 33,000
Max. Gross Weight - 46,000
Emergency War Order Weight - 50,000
Rotor Size - 72' 8"
Length - 88'
Footprint Width - 15'6"
Footprint Length - 27'
Minimum HLZ Size Training - 150' x 150'
Contingency - 125'W x 140'L
Rotor Height Above Ground - 16'

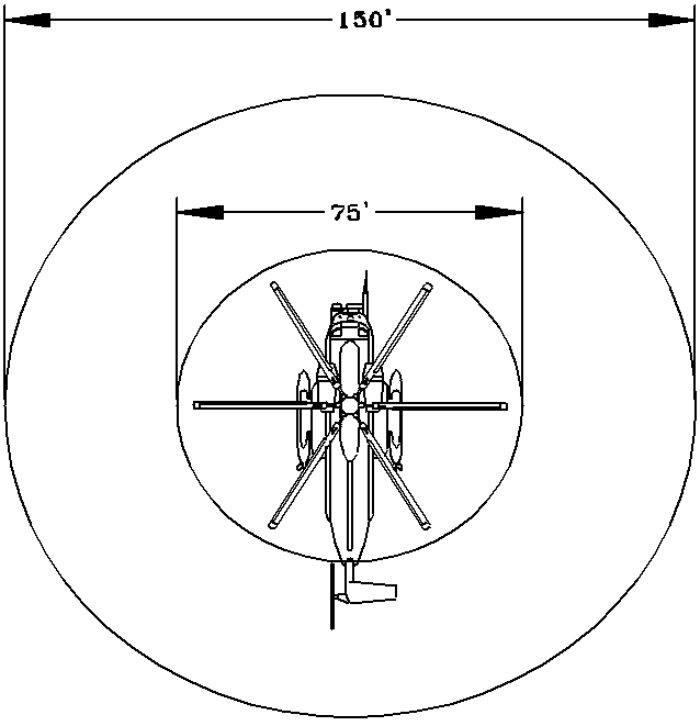

Figure A6.2. CV-22 Helicopter Landing Zone Size.

Operational Weight (Empty) - 35,000
Max. Gross Weight - 60,500
Emergency War Order Weight - 60,500
Rotor Size - 85'
Length - 58'
Footprint Width - 13'
Footprint Length - 22'
Minimum HLZ Size Training - 160' x 160'
Contingency - 135'W x 110'L

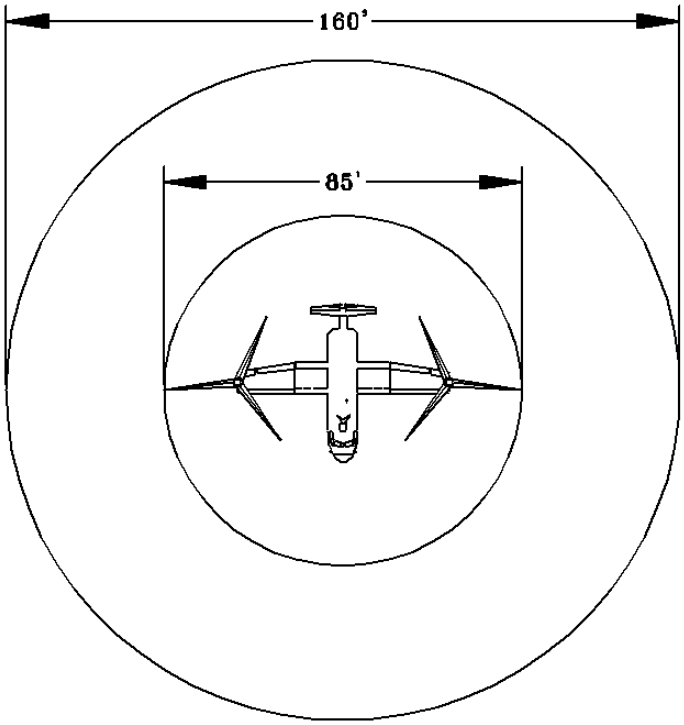

Figure A6.3. UH-1 Helicopter Landing Zone Size.

Operational Weight (Empty) - 8,000
Max. Gross Weight - 10,500
Emergency War Order Weight - N/A
Rotor Size - 48'
Length - 58'
Footprint Width - 9' 4"
Footprint Length – 13'
Minimum HLZ Size Training - 100' x 100'
Contingency - 25' clearance from any portion of the helicopter to the nearest obstacle.

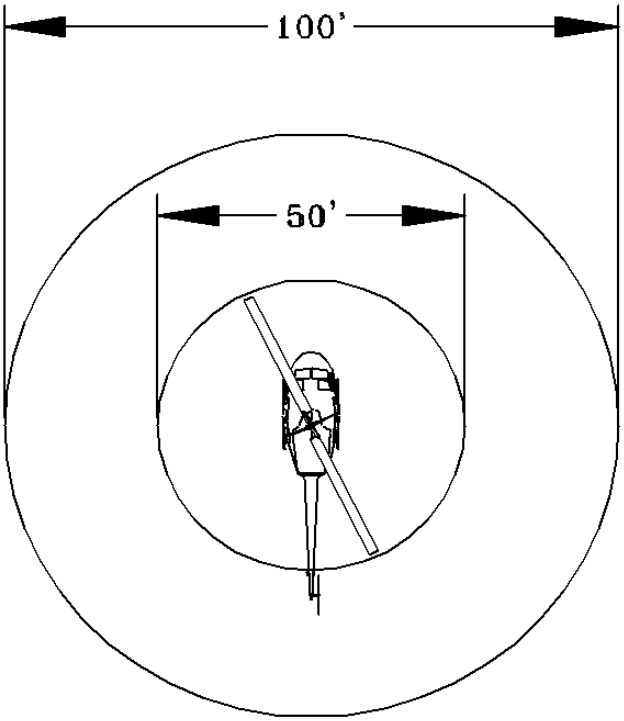

Figure A6.4. HH-60 Helicopter Landing Zone Size.

Operational Weight (Empty) - 14,600
Max. Gross Weight - 24,500
Emergency War Order Weight - 24,500
Rotor Size - 54'
Length - 65'
Footprint Width - 8'
Footprint Length – 40'
Minimum HLZ Size Training - 115' x 104'
Contingency - 105' W x 115' L

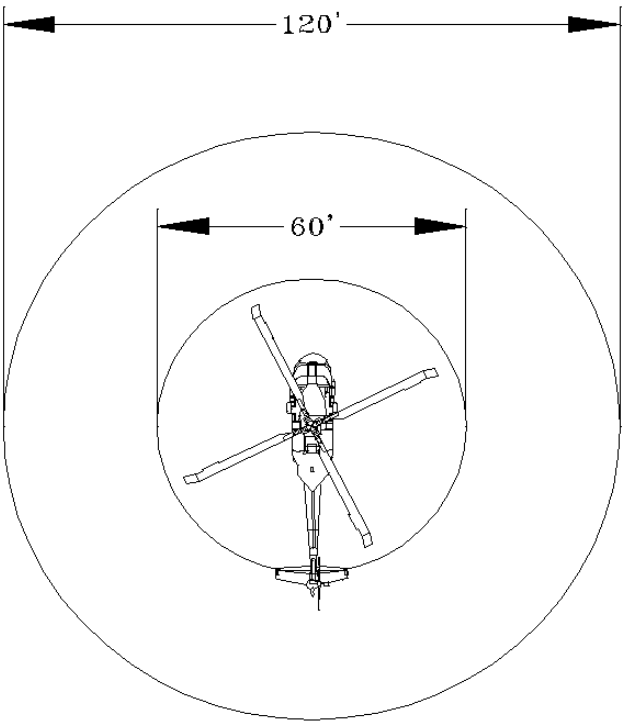

Figure A6.5. MH-47E Helicopter Landing Zone Size.

Operational Weight (Empty) - 32,000
Max. Gross Weight - 50,000
Emergency War Order Weight - 54,000
Rotor Size - 60'
Length - 99'
Footprint Width - 9'
Footprint Length - 30'
Minimum HLZ Size Training - 120' x 120'
Contingency - 110'W x 140'L

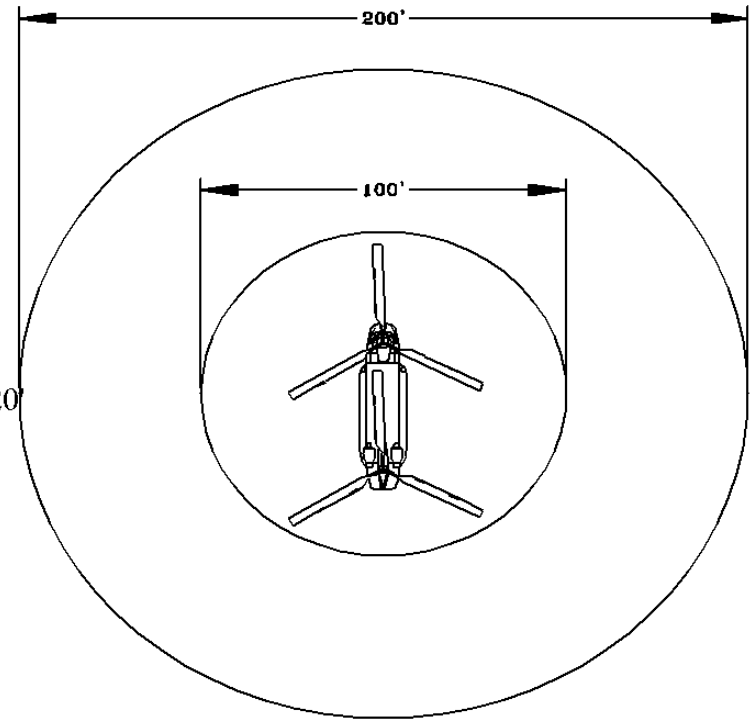

Figure A6.6. MH-6/AH-6 Helicopter Landing Zone Size.

Operational Weight (Empty) - 2,200
Max. Gross Weight - 3,100
Emergency War Order Weight - 3,950
Rotor Size - 27'
Length - 32'
Footprint Width - 6'
Footprint Length – 7'
Minimum HLZ Size Training - 50' x 50'
Contingency - 35'W x 40'L

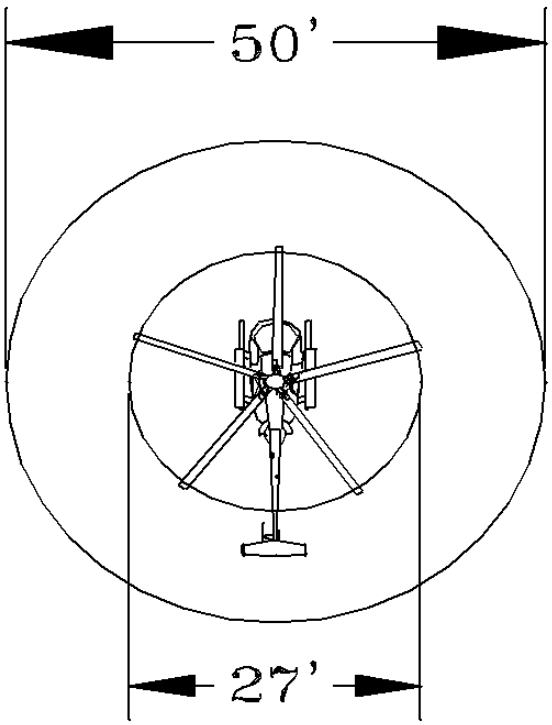

Figure A6.7. HLZ Survey Diagram from AutoCAD.

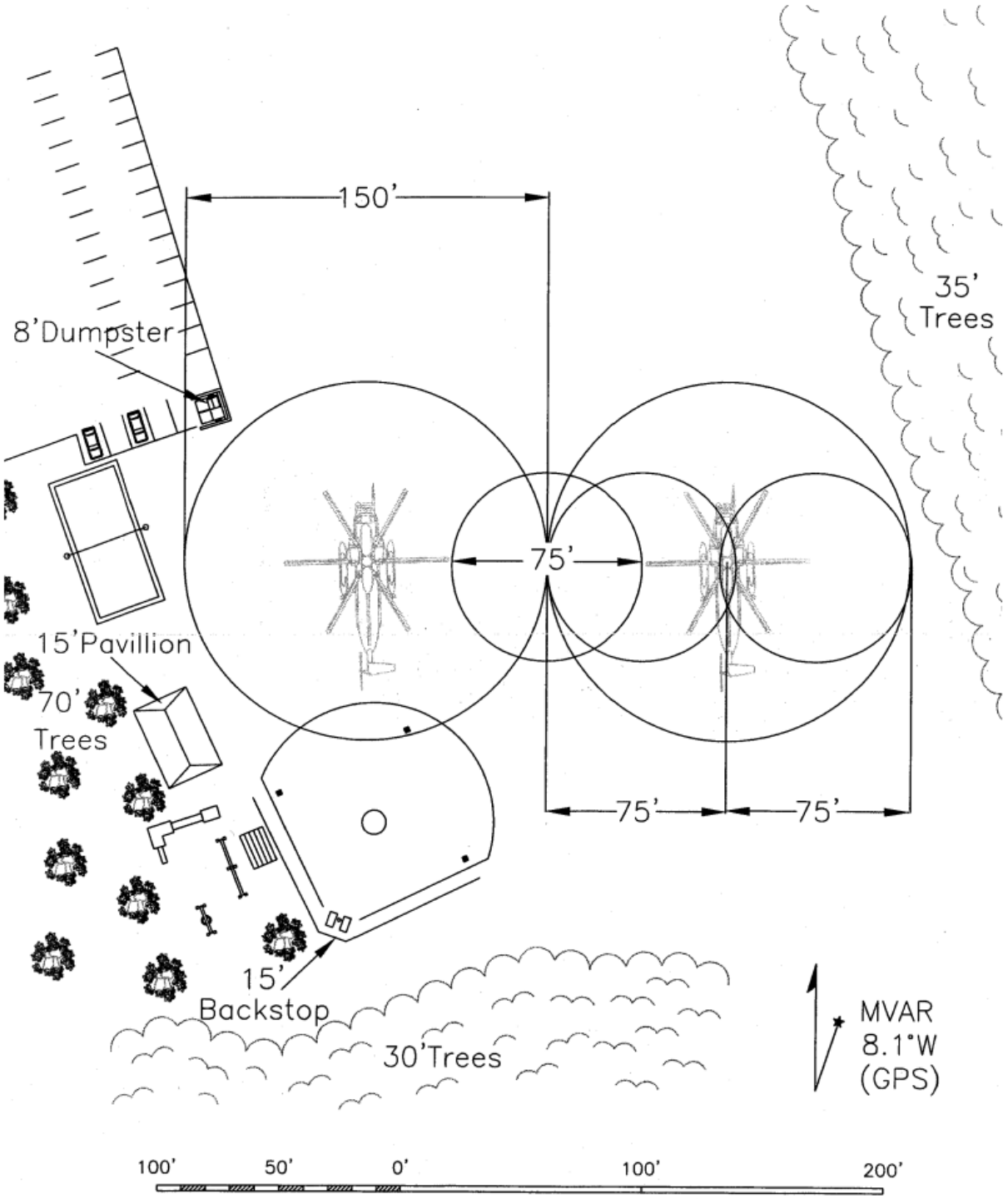

Attachment 7

AF FORM 4304, DROP ZONE / LANDING ZONE CONTROL LOG

A7.1. AF Form 4304, Drop Zone / Landing Zone Control Log. IAW paragraph **2.18.4.4.**, it is the responsibility of the DZC to ensure this form is complete and accurate. Group Tactics, or equivalent, will maintain completed AF Form 4304 IAW AFI 37-139, *Records Disposition Schedule*, Tables 13-2 and 13-8.

A7.2. Use the instructions listed below to complete AF Form 4304.

A7.2.1. DATE. Enter date and year. Use either calendar or Julian date. When a "time" is required use local or GMT consistent with the date.

A7.2.2. LOCATION. Enter DZ name.

A7.2.3. CCT AND UNIT. DZSTL name and unit.

A7.2.4. DZ/LZ CONTROL OFFICER AND UNIT. Self-explanatory.

A7.2.5. DROP ZONE SAFETY OFFICER AND UNIT. Self-explanatory.

A7.2.6. LINE NO. Mission sequence number of each aircraft.

A7.2.7. TYPE ACFT. Mission design series.

A7.2.8. UNIT. Unit of aircraft.

A7.2.9. CALL SIGN. Call sign of lead and, if applicable, formation position number.

A7.2.10. TYPE MSN. Refer to LEGEND for abbreviations.

A7.2.11. ETA. Estimated time of arrival, estimated TOT, or S3 air brief. Keep the unit of time consistent throughout the form (e.g., local or GMT).

A7.2.12. ATA/ATD. Actual time of every pass or actual time of departure.

A7.2.13. STRIKE REPORT.

A7.2.13.1. YDS. Distance first jumper/container/pallet lands from PI in yards. If within 25 yards it is scored a PI.

A7.2.13.2. CLOCK. Use direction of flight as 12 o'clock and back its azimuth as 6 o'clock, estimate direction from PI to first jumper/container/pallet. If time and conditions permit, the actual measurement is preferred.

A7.2.14. LZ. Mark the "S" box if a landing occurred between the beginning of the touchdown zone and the first 500 feet. If the landing was not successful (i.e., go-around), short of the touchdown zone, or 500 feet beyond the beginning of the touchdown zone, mark the "U" box and provide comments in the REMARKS box.

A7.2.15. SURF WIND. Surface wind direction in degrees, and velocity in knots.

A7.2.16. SCORE METHOD. Refer to LEGEND for abbreviations.

A7.2.17. MEAN EFFECTIVE WIND. Time taken and at what altitude.

A7.2.17.1. TIME. Self-explanatory.

A7.2.17.2. ALT. Should be drop altitude.

A7.2.17.3. DIR & LVL. Wind direction in degrees and velocity in knots.

A7.2.18. REMARKS. Enter remarks as appropriate.